JPRS 76825

17 November 1980

China Report

POLITICAL, SOCIOLOGICAL AND MILITARY AFFAIRS

No. 138

FBIS FOREIGN BROADCAST INFORMATION SERVICE

NOTE

JPRS publications contain information primarily from foreign newspapers, periodicals and books, but also from news agency transmissions and broadcasts. Materials from foreign-language sources are translated; those from English-language sources are transcribed or reprinted, with the original phrasing and other characteristics retained.

Headlines, editorial reports, and material enclosed in brackets [] are supplied by JPRS. Processing indicators such as [Text] or [Excerpt] in the first line of each item, or following the last line of a brief, indicate how the original information was processed. Where no processing indicator is given, the information was summarized or extracted.

Unfamiliar names rendered phonetically or transliterated are enclosed in parentheses. Words or names preceded by a question mark and enclosed in parentheses were not clear in the original but have been supplied as appropriate in context. Other unattributed parenthetical notes within the body of an item originate with the source. Times within items are as given by source.

The contents of this publication in no way represent the policies, views or attitudes of the U.S. Government.

PROCUREMENT OF PUBLICATIONS

JPRS publications may be ordered from the National Technical Information Service, Springfield, Virginia 22161. In ordering, it is recommended that the JPRS number, title, date and author, if applicable, of publication be cited.

Current JPRS publications are announced in Government Reports Announcements issued semi-monthly by the National Technical Information Service, and are listed in the Monthly Catalog of U.S. Government Publications issued by the Superintendent of Documents, U.S. Government Printing Office, Washington, D.C. 20402.

Indexes to this report (by keyword, author, personal names, title and series) are available from Bell & Howell, Old Mansfield Road, Wooster, Ohio 44691.

Correspondence pertaining to matters other than procurement may be addressed to Joint Publications Research Service, 1000 North Glebe Road, Arlington, Virginia 22201.

JPRS 76825

17 November 1980

CHINA REPORT

POLITICAL, SOCIOLOGICAL AND MILITARY AFFAIRS

No. 138

CONTENTS

INTERNATIONAL AFFAIRS

PRC Economic Journal on U.S. Military-Industrial Complex
(Cui Wei; SHIJIE JINGJI, 10 Aug 80) 1

'XINHUA' Reports on Indictment of Former CIA Employee
(XINHUA; 26 Oct 80) 10

Briefs
U.S. Engineers in Shanghai 11
U.S. Audio-Video Delegation 11
U.S. Museum's Asian Hall 11
Tianjin Recruits 11
Jilin Delegation to DPRK 12
Japan Municipal Assembly Delegation 12

PARTY AND STATE

Observations on 5th NPC Third Plenary Session
(DONG XI FANG, 10 Sep 80) 13

CPPCC Members' Speeches at Group Discussion Sessions Excerpted
(RENMIN RIBAO, 6 Sep 80) 17

History, Character of Zhao Ziyang Reviewed
(Jin Zhiming; DONG XI FANG, 10 Sep 80) 30

Importance of Proper Training For Young Workers Stressed
(GUANGMING RIBAO, 28 Aug 80) 40

Legal Provisions For Chinese Citizenship Explained
(Gong Qiuxiang; RENMIN RIBAO, 26 Sep 80) 45

Newspaper Correspondents Have Proper Right To File News Reports
(DAZHONG RIBAO; 27 Sep 80) 48

Kang Sheng Debunked As Self-Serving Mountebank
(Wang Tzukai; BEIJING RIBAO, 8 Aug 80) 50

Human Resources Should Be Used Where Most Needed
(Chen Ziande; BEIJING RIBAO, 8 Aug 80) 54

'Ba Yi Radio' Raps Deng Xiaoping For Repressing Criticism of Baoshan
(Ba Yi Radio; 29 Oct 80) 57

Briefs
Trial To Begin 2 Nov 59
Liaoning Democratic Parties' Meeting 59
Liaoning Visiting Delegation 59
Xinjiang Theatrical Delegation 59
Xinjiang Workers Congresses 59

MILITARY AND PUBLIC SECURITY

'Ba Yi Radio' Says U.S. Gives PRC Military Secrets to Taiwan
(Ba Yi Radio; 4 Nov 80) 60

'Radio Ba Yi' Criticizes 'Unjust' Purges of PLA Cadres
(Ba Yi Radio', 27 Oct 80) 62

'Radio Ba Yi' Criticizes Persecution of PLA Leaders
(Ba Yi Radio; 1 Nov 80) 64

Types of Mines, Detonators Diagramed
(Wang Weice; BINGQI ZHISHI; No 2, 1980) 66

Structure, Operation of Tank Cannon Stabilizer Outlined
(Qu Guoshan; BINGQI ZHISHI; No 2, 1980) 73

Briefs
Qinghai Enlistment 82
Xinjiang PLA Units Mark Corban 82

SOCIOLOGICAL, EDUCATION AND CULTURE

University Professor Urges Adoption of Academic Credit System
(Li Zhiyuan; JIEFANG RIBAO, 19 Aug 80) 83

Masses Urged To Respect, Strive for Knowledge
(Lu Gan; XINHUA RIBAO, 12 Aug 80) 86

Jiaotong University Exchange Program Praised
(JIEFANG RIBAO, 21 Aug 80) 89

Briefs

Xinjiang Japanese Language Society 91
Nei Monggol School Enrollment 91
Jilin Joint University 91
Kazak Language Publishing House 91
Xinjiang Publishing House 91
Shandong Islamic Congress 92
Shanghai Family Planning 92

INTERNATIONAL AFFAIRS

PRC ECONOMIC JOURNAL ON U.S. MILITARY-INDUSTRIAL COMPLEX

HK310520 Beijing SHIJIE JINGJI No 8 in Chinese 10 Aug 80 pp 23-29

[Article by Cui Wei (1508 4850): "The U.S. Military-Industrial Complex and State Monopoly Capitalism"]

[Text] The term military-industrial complex was first used by former U.S. President Dwight Eisenhower. In his outgoing speech on 7 January 1961, [date as published] he said: "The United States of America has never before experienced such a combination of huge military organs and military industry. All the influences of this combination can be felt economically, politically and spiritually in every city, at meetings in every state and in every office of the Federal Government." (Collected Presidential Papers No. 1035, 1960-1961). Apparently the military-industrial complex was sufficiently developed at that time to attract people's attention. Yet it has to be pointed out here that Mr. Eisenhower, who was then representing the interests of the long-standing consortia in the eastern part of the country, in no way opposed the existence of such a complex; yet he worried that the consortia in the west and the south that arose from arms dealings might get the upper hand. Consequently he warned the next government, saying, "we must prevent the military-industrial complex from influencing government organs intentionally or unintentionally. There exists and there will continue to exist the possibility that unjust authority will come into power, which could incur disastrous results." (Ibid). His warning had widespread repercussions in U.S. political, military, business and academic circles. Americans in various circles discussed from different angles this phenomenon that had "never been experienced before." Some said that the military-industrial complex brought disaster to the country while some others said that it brought security. In short, they regarded the military-industrial complex as a phenomenon that could be eliminated or retained. They could not and dared not touch upon the essence of this phenomenon.

The military-industrial complex is a product of modern monopoly capitalism. Therefore, in studying modern imperialism, it is important for us to study the formation, structure, essence and influence of the military-industrial complex. A profound study in this respect is of great significance in understanding the extent of U.S. national economic militarization and the features of U.S. monopoly capitalism.

I

Lenin said: "Modern militarism is the product of capitalism while its two forms are the 'living manifestation' of capitalism. One form is the military power that

is used by capitalist countries in external conflicts and the other is various arms that are used by the ruling classes to suppress various movements of the proletariat." (Collected Works of Lenin, vol 15 p 166) Because of definite historical conditions, the U.S. military bureaucratic organs in the 1870's were still not as advanced as those of the old capitalist countries in Europe. However, this situation changed in the era of imperialism. As the United States actively took part in dividing the world, its military organs developed rapidly. Lenin said in his "The State and Revolution": "It is 1917, the period of the first imperialist war. The limitation referred to by Marx is no longer viable. The Britain and the United States that are the biggest and the last representatives of the Anglo-Saxon 'system of freedom,' (speaking from the point of view that these countries have no warlord system nor bureaucratic system), have slid into the dirty and bloody mire of the European-style bureaucratic military organs that control and suppress everything." (Selected Works of Lenin, vol 3 p 203) Nevertheless, the extent of militarization of the U.S. national economy before World War II was still lagging far behind that of other European capitalist countries. Statistics show that during World War I, U.S. direct military expenditures made up only 15 percent of the national revenue, but they increased to 43.4 percent during World War II. The figures for Britain were, respectively, 36.9 percent and 55.1 percent, and for Germany, 31.6 percent and 67.8 percent. (B. Wa-xin) [3907 6580]: "Militarism of Imperialist Countries", Moscow, 1974, vol 169). However, following World War II, the military power of Germany and Japan began to collapse while that of Britain and France began to weaken; only the United States strengthened its military power. In order to defend and extend its interests, the U.S. monopoly capitalist group, which acquired exorbitant ill-gotten wealth, began to expand abroad. In the 1960's in particular, the U.S. monopoly capitalist group began to contend with the Soviet Union for world hegemony, and it indulged heavily in an arms race. It suppressed the people internally and stimulated production to insure its big monopoly profits, to slow down an economic crisis and to maintain enormous military expenditures. As a result, the United States has become the capitalist country with the highest degree of national economic militarization (see Table I).

Table I

Military Expenditures of Major Capitalist Countries After the War
as a Percentage of GNP

	1955		1960		1970		1976	
Country	(Million US$	Per-cent)	(Million US$	Per-cent)	(Million US$	Per-cent)	(Million US$	Per-cent)
U.S.	589	10.0	596	8.9	779	7.9	1,027	5.9
U.K.	64	8.2	59	6.5	59	4.9	107	4.9
France	40	6.4	52	6.4	59	4.2	129	3.9
Germany	30	4.1	40	4.0	62	3.3	125	3.7
Italy	14	3.7	17	3.3	25	2.7	38	2.6

Note: The figures for 1976 are based on prices in that year; the rest are based on 1970 prices.

Sources: The International Strategic Studies Institute (Britain) and Stockholm International Peace Research Institute (Sweden): "World Arms and Disarmament Yearbook."

including its indirect military expenditures, the U.S. military expenditures in 1975 totaled over $96.479 billion (based on 1959 fixed prices), 15 times the figures for 1973--US$6,228.70 million. (The U.S. Historical Statistics, 188901945, pp 718-719, published in 1949 and calculated according to the statistics from the annual report on the Defense Department Fiscal Year 1977, pp B-1 and A-7). The number of people employed in the U.S. armed forces increased from 300,000 in 1937 to 2,250,000 in 1975, a sixfold increase. The national defense expenditures for the whole 1930's made up only 10 to 15 percent of the federal budget, but in the second half of the 1960's they increased to between 55 and 60 percent (J. K. Galbraith "New Industrialized Countries," London, 1967, p 22). After the war, about 50 percent of the national defense expenditures were for military orders. During the 1960's the defense department signed contracts with an average of 22,000 general contractors per year. (The NEW YORK TIMES, 22 June 1969) However, most contracts fell into the hands of the 100 major arms companies. Of these the 50 biggest military industrial companies got most of the contracts (see Table II)

Table II

The Percentage of Total Military Orders Received by the 100 Major Arms Dealers and the 50 Biggest Dealers

Period or Years	Percentage of the 100 Major Contractors	Percentage of the 50 Biggest Contractors
June 1940 to September 1944	62.7	57.6
July 1950 to June 1953 (the U.S. launched war in Korea	64.0	53.6
1966 fiscal year	63.8	55.1
1967 fiscal year	65.5	56.1
1968 fiscal year	67.4	57.1
1969 fiscal year	68.2	56.9

Source: (Baldwin) "The Structure of the Defense Market," 1955-1964, p 9, and "Letters on Missiles and Arms," 15 Nov 1969, p 1)

These big companies made tremendous profits through their contracts with the Defense Department. According to the calculations made by U.S. Military Economist Professor (Moray L. Wedermo) between 1961 and 1965, the rate of actual net profits of the six big arms manufacturing companies was 17.5 percent, while the rate for six other arms companies of the same size which received no arms contracts was only 10.6 percent. U.S. Economic Review, no 5, 1968, pp 434-435) U.S. arms contracts have basically been signed through consultations. This encourages arms contractors to bargain over prices, and it encourages government officials and private companies to gang up with

each other in committing bribery and fraud. The introduction of "package" purchase since 1960 has especially made it more convenient for arms dealers to seek exorbitant profits. This form of military procurement includes practices such as the one whereby the Defense Department or its subsidiaries sign contracts with a big company for the research and design, production and experimentation involving various types of arms. This big contractor then hands over some production tasks or experimentation to other companies. The prices quoted by the big contractor include production costs and the profits defined by the government. If unexpected situations come up during the ordering procedure, the contractor is permitted by the departments concerned of the Defense Department to increase prices. Therefore, in order to get military orders, the general contractor usually intentionally lowers his bids. But once he wins a contract, he resorts to various pretexts to downgrade specifications and to alter designs so as to seek additional costs and still higher profits. Thus there is very intense rivalry among big monopoly companies over the military orders. The size of the shares of the orders wrested by these companies depends on the extent of their collaboration with the military departments. Such collaborations are effected through the exchange of staff by both sides. It is during this process that big industrial monopoly companies form close alliances with the military departments. Such alliances constitute the principal part of the military-industrial complex. Starting from this point, we can give a narrow definition of this "complex," that is, the military-industrial complex is an alliance which is formed on the basis of huge orders which flow between military departments and monopoly organizations. It can be said that the U.S. military-industrial complex is formed along the lines of the development of militarization in the U.S. national economy; that is to say, it is formed in a situation in which the contracts on tremendous orders for munitions are signed in a fixed form while military production is highly concentrated and monopolized.

It must also be pointed out that scientific and technological development has tremendously influenced the development of the U.S. military industrial complex. Since World War II, the technological revolution has penetrated every sector of production in the United States, with the result that social productivity has greatly increased this situation has enabled the United States to use tremendous manpower, capital and materials for military purposes. The influence of the revolution in U.S. military power has been manifested in both the quantity and quality of the U.S. weapons. The use of technological achievements for military purposes has resulted in a profound revolution in U.S. military technology; that is to say, the old and traditional weapons have been gradually replaced by modern ones. While the traditional military industrial departments have been declining, some sophisticated military industrial departments producing modern weapons have begun to emerge. Such new departments producing modern weapons have begun to emerge. Such new departments include the aerospace industry which is manufacturing supersonic military aircraft and missiles, the nuclear energy industry which is producing nuclear weapons, the electronics industry which is producing modern weapons systems, and the shipbuilding industry which is making modern aircraft carriers. (The products of these departments make up 85 percent of the total military purchases by the Pentagon). These sophisticated military industrial departments have become major production departments of the U.S. military-industrial complex today. Thus, with sophisticated science and technology the U.S. has embarked on the path of militarization. Since the war, most of the U.S. Government's research funds have been spent for military purposes. An article written by Professor (Seymour Meyerman) of Columbia University in 1972 stated that

"over the past 25 years, the military departments of the Federal Government have always controlled research work in the United States. Since World War II, the funds allocated by the Federal Government for research and development have come to $200 billion, of which 80 percent has been used by the defense, space and nuclear energy sectors." "One-half to one-third of the scientists, engineers and researchers throughout the country have been concentrated in the military industry and the related technological departments." (U.S. "The Nation," 20 Nov 1972)

Since the war, U.S. science and technology has, to a certain extent, directly served the making of modern weapons. Since the results of the scientific and technological revolution have been used in military production, the structure of modern weapons has become complicated and their manufacturing costs continue to climb. (For example, during the post-war period, the tonnage of newly-built naval vessels was on the average 4,500 tons, with building costs ranging from $95 million to $115 million; but the aircraft carrier "Enterprise," which was built in 1961 with a tonnage of 75,700 tons, cost as high as $444 million). In addition, more and more of the existing weapons have been discarded as useless (in the space of 10 to 15 years, U.S. missiles and other military equipment have been replaced by second and third generation equipment) a phenomenon which has tremendously increased military expenditures. These huge expenditures are the material base for the existence of the military-industrial complex. Apparently, without the scientific and technological revolution after the war, the U.S. military-industrial complex would not have been able to develop as tremendously as it has up to now.

II

The U.S. military-industrial complex is not just a simple combination of military and industrial circles. It is a very complicated system with a structure divided into five main parts.

First, there are the leading military and management departments. Such departments include the Defense Department, the defense committee, the defense management committee and the national military scientific research committee. The Defense Department is the leading department. It manages staff, distributes military purchases, oversees the production and development of weapons, takes part in formulating external military strategy and in coordinating diplomatic activities. It also commands the armed forces and determines strategic orientation and the principles of the combined operations of the three forces.

Second, there are the big arms monopoly on the one hand, which contract with the departments of the three forces under the Defense Department on military goods, and on the other hand the banking consortia which are closely linked with these companies. Of the 100 biggest arms companies mentioned above, 15 are purely monopoly companies. These companies are: Lockheed Aircraft, General Dynamics, United Aircraft, McDonnell Douglas, Boeing, North American Rockwell, Martin Marietta, Grumman, Raytheon, Lim-Temco-Vought, Newport News Shipbuilding, (Tai-ao-ke-er) [1132 1159 2688 1422], (A-fu-ke) [7093 5346 2688], Collins Radio and Northrop Aircraft. From 1961 to 1967, the military production of these companies made up 55 to 96 percent of their total production, of which Lockheed Aircraft, Newport News Shipbuilding and (Tai-ao-ke-er) respectively accounted for 88, 90 and 96 percent. (R.E. Lai-pu) [5490 2528]: "The Civilization of Weapons," New York, 1968, pp 186-187]

There are also nine semimilitary industrial companies. From 1951 to 1967, the military production of these companies made up 25 to 50 percent of their total production. These companies include: Sperry Rand, Bendix Aircraft, Textron, Kaiser Industries, GTE, Litton Industries, Pan American Airlines and Hercules Munitions Company. For some other companies production of military products accounts for a small percentage of their total production, but the value of their military products is very high. For example, during the 1961-1967 period, the military products of the General Electric Company made up only 19 percent of its total production; but this company ranks fifth among all the contractors of the national defense industry. Such companies include International Telephone and Telegraph, Ford Motor Company, General Motors and New Jersey Mobil Oil. The banks that maintain close relations with these military-industrial monopoly companies include Bank of America, Security Pacific Corp., Chase Manhattan, First City Bank, Chemical Bank, First National Bank, Zhou-jie [1558 5894] Bank, Bankers Trust, Morgan Guaranty Trust Bank and Mellon National Bank.

Third, there are the specialized research organs that are responsible for formulating military strategy and designing strategic weapons. Among such organs, 16 research institutions get subsidies from the Defense Department. They include the so-called "brain trust" of the Rand Corporation, Hudson Research Institute and Georgetown Center for Strategic and International Research, as well as the National Defense Analytical Research Institute which is composed of 12 universities. They also include the Trilateral Commission, the Hoover War, Revolution and Peace Research Institute and the Brookings Institution. The military technological research laboratories belonging to universities include the Jet Propulsion Laboratory of the California Institute of Technology, the Wireless Laboratory of Harvard University, the Ballistics Laboratory of Princeton University and Aerofire Power Control Systems Laboratory of Franklin University.

Fourth, there are the mass organizations that support the militarization of the national economy. They include the U.S. Artillery [as published] Association that serves as liaison between military and industrial departments, the Society for the Promotion of National Security Industrie the Association of Military Space Industries, veterans organizations. the trade anagement bureaus which are connected with the sales of munitions, and some branch of the AFL-CIO.

Fifth, there are various publications that are related to military theories, strategic ideologies and military technology. Such publications provide spiritual support for the military-industrial complex.

Structurally, the U.S. military-industrial complex does not have a fixed form of organization comparable to that of the worker-peasant alliance. However, it is a complex system composed of government military organizations, big monopoly military companies, research institutes that are responsible for developing military technology, and mass organizations that are related to military activities. (The first two parts are the core of the complex.) Through this complex the U.S. Government is able to acquire material equipment for its armed forces, to regulate the size, structure and geographic locations of the military industry, to stimulate the development of military technology and to take serious measures during emergency periods of war and economic mobilization. The activities of the U.S. military-industrial complex directly and indirectly influence the lives of many Americans at home. The book "War Economy Turned Into Peace Economy," which is written by U.S.

economist (Seymour Meyerman) and published in 1970, speculates that "20 percent of the U.S. workers depend economically on the Defense Department." Within the complex these workers have been plundered and controlled while the activities of the complex are decided by a few military and industrial magnates.

III

Lenin said: As capitalism has developed into monopoly, "there exists, in addition to the individual alliance between banks and industry, the individual alliance between these two types of companies and government." (Collected Works of Lenin, vol 25, p 371) The military-industrial complex is based on this latter "individual alliance" which is concretely shown in broad "exchanges" of staff between the state military organizations and big military industrial monopoly companies. The monopoly companies producing munitions usually employ a number of retired officers as senior executives while the state military departments also employ a number of senior staff members from such companies. According to the statistics of the U.S. Defense Department, in the 4 and 1/2 years from July 1967 to December 1971, such companies employed 1,101 senior officers from the Defense Department. The figure also includes retired general grade officers and field officers and officers of the same grade in the reserve army. At the same time, the Defense Department also employed 232 senior staff members from such companies as senior officers. The defense secretaries of the postwar administrations all came from big companies. For example, the defense secretary in the Truman administration, Mr G. Marshall, was a former director of Pan American Airlines. Mr C. Wilson, defense secretary in the Eisenhower administration, was former general manager of General Motors, Mr R. McNamara, defense secretary in the Johnson administration, was former general manager of Ford Motors; David Packard, defense secretary in the Nixon administration [as published], is general manager of Hewlett-Packard; the defense secretary of the current administration H. Brown was an IBM director. Exchanges of senior staff was described by Lenin when he said in his book "Bankers and Investors": "Today they are ministers but tomorrow they will become bankers; today they are bankers and tomorrow, ministers." (Collected Works of Lenin, vol 24, p 97)

Needless to say, such personnel exchanges make it convenient for munitions monopoly companies to get arms contracts and thus to make big profits. Take Lockheed Aircraft Company, the leader of the munitions monopoly companies, as an example. Before this company developed the U-2 reconnaissance plane (1954-1955), it was informed that the U.S. intelligence departments were interested in reconnaissance planes and it hurriedly hired Mr (Alyward Kessada), a lieutenant general of an intelligence department, as deputy general manager. Soon after Mr (Kessada) took up his new post, Lockheed Aircraft was awarded an urgent order for a U-2 reconnaissance plane. Over the past years, most retired officers employed by Lockheed have come from the navy because it was apparent that during that period the company was developing a marine specialization. The Orion and Corsair (S-3A) anti-submarine aircraft and Polaris and Neptune [as published] missiles developed by Lockheed were supplied to the U.S. Naval departments through the contracts won by its ex-servicemen staff. The company's "military liaison" committee has more than 200 retired servicemen above the rank of colonel. Thus, by relying on such "servicemen-salesmen," Lockheed Company no longer needs to worry about its sales. Furthermore, the company has been able to improve contract conditions and to increase arms prices. Since the 1970's, Lockheed has produced $1.5 to $2 billion worth of arms every year, with profits increased by at least $300 million even if we base this figure on the average rate of increases

in U.S. arms prices. (G. M. Kusmin): "Military Concern," Moscow, 1974, p 135) The situation of other munitions companies is the same. It is precisely this "individual alliance" which makes it very easy for big monopoly organizations to use the state apparatus to make big monopoly profits. At the same time, the state, which is the "general capitalist," also helps monopoly capital through this "individual alliance" to make tremendous profits. Secretary of Defense under Eisenhower Mr C. Wilson said: "What is good for General Motors is good for America." (U.S. Labor Research Association: "The Billion-Dollar U.S. Corporation ," New York, 1954, p 20) Such situations are just what Lenin said: "The alliance between the state and the most powerful capitalists is becoming closer and closer." (Collected Works of Lenin, vol 25, p 371) Such is the nature of the military-industrial complex.

The nature of the U.S. military-industrial complex can be seen more clearly through some measures taken by the state in adjusting the economy. U.S. Government investments in enterprises have continued to increase since the war. Statistics show that up to the early 1970's, U.S. government assets (including development properties) had already reached as high as $400 billion. As most government investments are concentrated in military enterprises, most of the government's assets belong to the Defense Department. "The Military-Industrial Complex," which was published by (Luns) in 1970 estimated that the actual assets of the Defense Department reached as high as over $300 billion, surpassing any U.S. monopoly group. The government also invests in sophisticated munitions industrial departments financed by private monopoly funds. For example, nuclear power enterprises are mainly operated by private capitalists. But the raw materials, equipment, factory buildings and laboratories are financed by the government. Government investments in other advanced munitions departments are also quite enormous.

The nature of the military-industrial complex is even clearer in a nation where consumption is mainly concentrated in purchasing military goods. In order to stimulate production, the U.S. Government has since the war constantly increased the purchases of commodities and manpower. From 1946 to 1970, the U.S. Federal Government spent $1,365 billion (calculated on the prices at that time [as published]) on purchasing commodities and manpower, of which $1,108 billion was spent on military goods--about 80 percent of the total purchases of commodities and manpower. ("Presidential Economic Reports," 1971, p 1[illegible])

It can be seen from the above-mentioned two measures that in order to defend the political and economic interests of financial magnates, the U.S. Government since the war has worked hard to stimulate economic growth and to ease the antagonistic contradictions in capitalist reproduction through militarizing the national economy. This practice is an important feature of modern day state monopoly capitalism.

The existence and development of the military-industrial complex has deeply influenced the U.S. political, economic and other sectors. Economically, military expenditures mean that the results of the work of scores of millions of laborers are used for destructive purposes.

Even U.S. military circles cannot but acknowledge such purposes. Former U.S. Assistant Secretary of Defense Richard Perse estimated that "if the result of the production of each U.S. dollar used in the U.S. space program (military) was the same as that used in civil industrial research and development, then economically, the United States would have additional income of $100 billion per year." ("U.S. NEWS & WORLD REPORT," 7 June 1971, p 24) Of course, during a certain period, the

activities of the military-industrial complex can temporarily stimulate economic growth. Through orders for military goods, the total demand by the government can be intentionally expanded to temporarily ease the contradictions of reproduction and to delay the outbreak of economic crisis. For example, during the period when the U.S. launched a war of aggression in Korea, the state's total orders for military goods jumped from $20.7 billion in 1950 to $63 billion in 1953 (an increase of 210 percent). The Gross National Product also increased by 20 percent. ("Presidential Economic Reports," January, 1964) The U.S. industrial output in 1960 was 9 percent higher than in 1965. ("Basic Economic Handbook," 16 Sep 1968, p 79) But such increases were mainly due to increases in orders for military goods during the war of aggression against Indochina. In 1967, total orders for military goods began to decline and it was followed by the U.S. economic recession. In 1969, a new economic crisis broke out.

We must also understand that the activities of the military-industrial complex to a certain extent influence U.S. foreign policies. For example, the big arms companies that sign contracts on strategic weapons usually coordinate their programs for developing weapons with those of the related government military departments. Thus, these companies in fact take part in formulating official programs for developing weapons, and to some extent too influence the formulation of foreign policy.

The formation and development of the military-industrial complex also influence the comparative economic strength of the old and the new consortia. Most of the important production departments of the U.S. military-industrial complex that are producing sophisticated weapons are concentrated in the sunbelt of the southern part of the country. That is why over the past 20 years more and more orders for military goods have been won by contractors in the south. The percentage of military contracts won by monopoly munitions companies in the 14 states of the northeast dropped from 60 percent in 1952 to 31.5 percent in 1972. But the figures for the 21 states in the central-south, the Pacific Coast and the Atlantic coast (of these 21 states, 12 are in the sunbelt) rise from 37 percent in 1952 to 50.1 percent in 1972. (Calculated according to the figures appearing in diagrams 2 and 3 of "the regional locations of principal military contractors" in the book "Economic Results of Cutting Down Military Expenditures" by (Bernard Fowin) The "Defense Space Daily" stated in 18 April 1977 that the principal military contracts signed by the Defense Department in 1976 were for $12.849 billion, of which $3.363 billion were won by the sunbelt states of California [as published] and Texas, about 22 percent of the total. In 1977, these two states won principal military contracts to the tune of $3.999 billion, about 30 percent of the total. Thus the new emerging consortia of the western part of the country that are led by the Bank of America consortium and the Texas consortium have rapidly strengthened their economic power to oppose that of the old consortia of the northeast. The "worry" expressed by Eisenhower over the growth of the military-industrial complex actually reflects the clash of interests between the old and new consortia in the United States.

The formation and development of the military-industrial complex shows that demilitarization of the national economy is related to the development of state monopoly capitalism. The formation of state monopoly capitalism provides conditions for the national economic militarization which in turn promotes the development of state monopoly capitalism. The feature of monopoly capitalism is that the state apparatus belongs to monopoly capital, and this feature is shown in the activities of the military-industrial complex. It is in such activities that a few financial tycoons make use of the state apparatus (military budget) to exploit the people and to make big profits. Therefore, the U.S. military-industrial complex also reflects that since the war the United States has found itself facing various contradictions politically, economically and socially.

CSO: 4005

INTERNATIONAL AFFAIRS

'XINHUA' REPORTS ON INDICTMENT OF FORMER CIA EMPLOYEE

OW281031 Beijing XINHUA Domestic Service in Chinese 0306 GMT 26 Oct 80

[Text] Beijing, 25 Oct (XINHUA)--According to reports from Washington, the U.S. Justice Department on 24 October announced that former U.S. CIA employee David Barnett had been charged with being a Soviet spy.

A federal grand jury in Baltimore indicted the 47-year-old Barnett with giving Soviet secret agents (KGB) classified information involving a secret CIA operation known as "Ha-brink." The purpose of the operation was to collect relevant Soviet manuals and information on Soviet military equipment.

The indictment said: Barnett turned the classified information over to Soviet agents in Vienna and Djakarta between October 1976 and February 1977.

Barnett worked for the CIA for 12 years. At the direction of Soviet agents, Barnett tried to obtain employment with the Senate Intelligence Committee but he did not succeed.

CSO: 4005

BRIEFS

U.S. ENGINEERS IN SHANGHAI--The San Francisco engineering and technical group headed by (Li Wen Hui), director of the Public Works Bureau and Waste Water Planning Bureau of San Francisco, United States, has been visiting places in Shanghai and carrying out technological exchanges with related departments in the past few days. [OW270841 Shanghai City Service in Mandarin 0000 GMT 23 Oct 80 OW]

U.S. AUDIO-VIDEO DELEGATION--The technological exchange meeting, sponsored by the Ampex Company of the United States, on professional video and audio equipment ended in Nanjing, Jiangsu, on 22 October. Several hundred professional workers from radio, television and motion picture circles all over the country viewed Ampex products on display and exchanged technological information and discussed trade with the Americans. The Ampex Company sold advanced equipment at most preferential prices to the Jiangsu television station. [Nanjing Jiangsu Provincial Service in Mandarin 2300 GMT 23 Oct 80 OW]

U.S. MUSEUM'S ASIAN HALL--Beijing, 24 Oct (XINHUA)--A newly built Asian Hall at the U.S. Museum of Natural History in New York was recently opened to the public. An opening ceremony was held on 16 October. Many UN delegates from Asian countries, including Chinese delegate Ling Qing, attended the ceremony. UN Secretary General Waldheim spoke at the ceremony, expressing his hope that the Asian Hall will become a tool in promoting peace through mutual understanding. On display in this exhibition hall are some 3,000 works of art and handicraft from various Asian countries, including China, Japan, Korea and India. A concert will be held to introduce Chinese music, and films introducing Beijing, Suzhou and Xian will be shown at the hall in November. [Beijing XINHUA Domestic Service in Chinese 0352 GMT 24 Oct 80 OW]

TIANJIN RECRUITS--The Tianjin Municipal People's Government and the Tianjin garrison district jointly issued a circular saying that the city would begin this year's winter enlistment work on 20 October. The order issued by the Central Military Commission and the State Council requests our city to draft a number of recruits to reinforce the PLA ranks. Rural youths with a middle school background whose families have enough manpower and educated youths who have been sent to the countryside will be drafted. In urban areas, this year's high school graduates, aged 18 and 19, will be drafted. [SK271229 Tianjin City Service in Mandarin 0030 GMT 22 Oct 80 SK]

JILIN DELEGATION TO DPRK--The people's governments of Jian, Changbai and Hunjiang counties and Tumen Municipality dispatched friendship delegations to Chunggang, Manpo and Ponsong counties and Hyesan City of the DPRK, which are adjacent to our territory, on 24 October. The delegations will attend the celebrations of the 30th anniversary of the Chinese people's volunteers' entry into the Korean War. They are mainly composed of principal responsible comrades of the respective county and municipal people's governments. On leaving our country, the delegations were seen off by responsible persons from departments concerned of the respective counties and municipalities. [SK250725 Changchun Jilin Provincial Service in Mandarin 2200 GMT 24 Oct 80 SK]

JAPAN MUNICIPAL ASSEMBLY DELEGATION--Di Jingxiang, vice chairman of the standing committee of the Shanghai Municipal People's Congress, met with the visiting Japanese delegation of Municipal Assembly Speakers on 22 October. [OW270841 Shanghai City Service in Mandarin 0000 GMT 23 Oct 80 OW]

CSO: 4005

PARTY AND STATE

OBSERVATIONS ON 5TH NPC THIRD PLENARY SESSION

Hong Kong DONG XI FANG [EAST AND WEST] in Chinese No 21, 10 Sep 80 pp 12-13

[Article by Commentator: "Preliminary Observations on the Third Plenary Session of the 5th NPC"]

[Text] At the time of writing, the Third Plenary Session of the Fifth National People's Congress and the session of the People's Political Consultative Conference are still in progress, and Hua Guofeng's important speech has not yet been published. Nevertheless, Hua has already intimated to Japanese reporters that Zhao Ziyang will soon take over his post as premier, but the People's Congress has not yet officially announced this. Under these circumstances it is very difficult to write an analysis of the 5th NPC, but if the report is further delayed, the present issue of this magazine may fail to come out in time, thus herewith merely some observations on what has been learned so far:

The People's Congress Created a Good Democratic Atmosphere

In our opinion the Third Plenary Session of the Fifth National People's Congress was basically a successful meeting. Its greatest success was not the peaceful changes in the high levels of the central government's leadership, but rather that it created very successfully an atmosphere and spirit of "democracy." In the past, People's Congresses and Political Consultative Conferences appeared merely as machinery with hand-raising robots. Whatever proposals the communist leadership submitted, the assembled delegates would raise their hands as a kind of ceremonial function and approve the proposals without giving them a thought. But the present NPC gives everyone a new impression. The majority of its delegates are men capable of independent critical thinking. They are no more hand-raising robots. This is very good, it is the beginning of a "people's democratic government." Only under the conditions of giving free rein to independent critical thinking of the people's delegates and only by giving free rein to the NPC to fulfill its functions can the political control of bureaucrats and of the party be restricted and democratic politics be developed.

At the present NPC, delegates asked for an explanation of the "Bohai No 2" incident; Tang Ke, minister of metallurgical industry, was questioned about problems of investment and industrial pollution at the Baoshan Iron and Steel Works; Zhou Huamin, vice minister of foreign trade, was questioned on the waste of foreign exchange in building the Beijing Foreign Trade Center. The delegates also demanded an investigation into the criminal responsibilities of Song Zhenming, former

minister of petroleum industry, and Chen Yonggui, former Da Zhai leader and vice-premier. The delegates furthermore did not merely clap hands and pass the administrative reports, plans and programs presented by the state leadership but dared present varying viewpoints.

The delegate from Guangdong Province publicly criticized Yao Yilin, chairman of the state planning commission and vice-premier, claiming that Yao's economic report placed too much emphasis on industry and too little on agriculture, that it still placed main emphasis in the country's economic construction on the development of heavy industry and neglected light industry and agriculture, and that his report contained no concrete measures for the development of light industry and agriculture.

On the question of foreign exchange certificates, the Hongkong-Macao delegate raised objections, claiming that the existence of foreign exchange certificates creates the situation of having two currencies in one country, with much unnecessary confusion resulting. He also pointed out that the issue of these foreign exchange certificates has never had the approval of the country's highest authority, namely of the NPC. The delegates of the NPC furthermore aired their views on bureaucratism, on the system of economic management, on the "four freedoms," and on problems in education and in the publishing industry. They truly reached a stage of free and uninhibited expression.

Laws Guaranteeing Personal Freedom Urgently Needed

Even though we may not be quite satisfied with the way the delegations to the NPC and the Consultative Conference had come about, and although we may consider the "democracy" displayed at the NPC not to be very abundant, we must concede that the Chinese mainland, ruled for such a long time by "feudal fascism," cannot be expected to jump with one leap right up into the lofty region of democracy. We, who are a small particle of the Chinese nation, must wait patiently and must enthusiastically offer our assistance. At present the Chinese communists have just made a start in the reform of their political and economic system, and this is very important since a good beginning is half success. It is our hope that the Chinese communist reform party continues to exert its efforts, and we hope that the delegates to the NPC and the Consultative Conference continue to promote and apply supervision over this kind of welcome reforms.

It has been repeatedly emphasized in the past that throughout history people have developed from slaves to masters, a development along the road from bondage to thorough liberation, even though for short periods reactionary movements may make their appearances, such as the Lin Biao and "gang of four" style "revolutions" in China or the Khomeni type "revolution" in Iran. However, the people's general trend and general direction toward liberation is never changing and cannot be diverted at will by any man. A clear proof of it is the way that China has moved from the dictatorship of Lin Biao and "gang of four" type of feudal fascism to the present "socialist democracy" of limited scale.

The people's democracy are eternal and boundless and will compel rulers again and again to make concessions to the people. We predict that the "democracy" on the Chinese mainland will be continuously expanding because without such expansion the people will not respond. However, the result of democratic expansion will of

necessity clash directly with the bureaucratic structure and might quite possibly provoke repressive countermeasures by the bureaucracy. The Chinese communist reform party must foresee this possibility and for that reason found it urgently necessary to draw up a "law on safeguarding personal freedom." Only under the guaranty of fullest "personal freedom" can the people exercise effective supervision over the bureaucracy of the government. It is only regrettable that the present NPC and Consultative Conference neglected this question. Someone merely proposed to abolish the "four great freedoms," but no one dealt with the protection of personal freedom and protection of basic human rights. It seems that the pioneers of the democratic movement will still have to pay a price to achieve that.

Temporary Compromise Between Deng Faction and Non-Deng Factions

Up to the time that this draft has to be sent in, the personal shifts in the state council and the NPC have not yet been officially announced, but news that has so far filtered out indicates:

1. Zhao Ziyang will become premier; Hua Guofeng will resign as premier and continue solely as chairman of the CCP Central Committee.

2. Deng Xiaoping, Li Xiannian, Chen Yun, Xu Xiangqian, Wang Zhen and Wang Renzhong will resign as vice premiers and continue solely as members of the Central Committee or Central Military Affairs Commission.

3. Nie Rongzhen, Liu Bocheng, Zhang Dingcheng and Cai Chang will resign as vice chairmen of the Standing Committee of the NPC.

The three kinds of personnel changes do not come as a surprise because several months ago the communists have let this news filter out through various channels. The only items that do not agree with what had been revealed previously is the resignation of Ye Jianying and the appointment of Peng Zhen as chairman of the NPC Standing Committee.

Ye Jianying was born 1897 and is now 83 years old. The only one older among this group of retiring veterans is Liu Bocheng, who has not been seen in public for a long time. The fact that Ye Jianying, despite his high age, still does not want to resign and retire indicates that opinions are not at all uniform at the leadership level on the question of "abdicating to make room for worthy ones" and on the question of criticizing Mao Zedong.

For Ye Jianying to continue in his position of chairman of the standing committee of the NPC is significant on four points:

1. To keep the highest leadership position in the NPC in his hands will prevent the Deng faction from snapping it up.

2. Ye Jianying's position, chairman of the standing committee of the NPC, is still in name the position of head of state. By holding on to it, he may prevent the Deng faction from changing the constitution and reestablishing the office of state president.

3. Ye Jianying's holding on to his position may be a guarantee against any change in Hua Guofeng's position. It may also be a protection for the opposition faction of Xu Shihyou, Yang Chengwu and others.

4. It can prevent an intensification of the movement for a criticism of Mao Zedong and prevent the radical anti-Mao elements from undertaking a "whipping of the corpse."

Just because Ye's retention of his position has such great significance, politically, we must not dismiss Ye's proposal of a "revolution to the end" merely as a mischievous feudal ideology. It is quite possible that Ye himself would like to retire and relinquish his position to be occupied by a "worthy one," but the people around Ye, such as Hua Guofeng, Xu Shiyou, Yang Chengwu and others do not want Ye to resign. The retention of Ye Jianying of his position has to some extent the effect of balancing out the various factions, it keeps the factional struggle in the high level of the leadership from sharpening and intensifying. The delay in the public trial of the "gang of four" and the low key in "criticism of Mao" are, we believe, the result of Ye's vigorous contention of these moves.

Any ruling class is highly averse to disclosing in front of the public its internal differences. Mao Zedong, Lin Biao and their four Central Committees were like this; Hua Guofeng, Ye Jianying, Deng Xiaoping and their Central Committees were also like this. The special report by the Beijing propaganda machine about such high-ranking military leaders as Xu Shiyou, Yang Chengwu and others attending the NPC is just to cover up such a contradiction and difference among them.

In as big a country as China and as large a party as the CCP, it is no wonder that there are internal factions and contradictions in the leadership level, the question is only how such contradictions and struggles are being dealt with. Judging from the Third Plenary Session of the 5th NPC, there has already been some arrangement between the Deng faction and the non-Deng factions. Both sides have made some concessions. Any problems that could not be solved have been left over for the 12th National Party Congress to decide.

8453
CSO: 4005

CPPCC MEMBERS' SPEECHES AT GROUP DISCUSSION SESSIONS EXCERPTED

Beijing RENMIN RIBAO in Chinese 6 Sep 80 p 2

[Text] Editor's note: For days in a row the CPPCC members attending the Third Session of the Fifth Congress of the CPPCC have been discussing in small group sessions the opening statement of Comrade Deng Xiaoping and the work report of Comrade Xu Deheng [6079 1795 3801], the representative of the CPPCC's Standing Committee. They also discussed Comrade Ye Jianying's [0673 0494 9351] opening statement at the People's Congress and the two reports delivered, respectively, by Comrades Yao Yilin [1202 0181 2651] and Wang Bingqian [3769 0014 0040] on behalf of the State Council. These members were in unanimous agreement with and offered their full support to the reports. In their talks during the group sessions, these members also presented many suggestions and opinions. Following are excerpts of some of the talks given by them.

CPPCC members Yue Xixin [1471 1585 2450] and Jiang Zemin [3068 3419 3046] advocated, "The Work Toward Economic Construction Must Enhance Democracy, and Truth Must Be Sought from Facts."

CPPCC member Yue Xixin said "The work toward economic construction must enhance democracy. All investigations and research must be practical and realistic. The principle of having 10 or more Da Qing [model plant] is good. But there is no investigation or research to support this principle. Thus, it is only a slogan. What is its basis? There are no 10 model plants. As a matter of fact, all the 9 newly introduced fiber plants have been experiencing a shortage of natural gas, the basic raw material. Plans have been drawn up to double the size of the capital construction for coal production in Shansi Province, and to increase within 10 years, coal production by 100 million tons. Aside from this, a 2,000 kilowatt generating station has been planned, to be built at the mouth of the pit. However, these plans are difficult to execute because Shansi is short in water supply. Plans of such magnitude must be decided democratically--the opinions of the various departments concerned must be heard and decisions should not be made unilaterally.

CPPCC member Jiang Zemin [3068 3419 3046] said, 'In the past, the method of 'three-front construction' was emphatically acclaimed; but now the pendulum has swung to the other extreme and the method has been totally abandoned. A thorough study must be made to see how the first front can be made to help the second and third fronts. To realize the four modernizations, progress must be made gradually. Don't be afraid that the progress is slow. It is the standing-still or the change of course that should be feared. We must work realistically and practically. Fantasies must be avoided; and, instead of giving a sweepingly general treatment to all the problems, each problem must be addressed individually, realistically, and practically."

CPPCC member Zhu Dixin [2612 3321 2450] said, "The Industrial System Must be Changed."

CPPCC member Zhu Dixin said, "The general guiding principle, policy, and task, as stated currently by the central authorities are clear and correct. The most prominent problem faced by the industrial sector in carrying out the tasks laid out by the central authorities is the industrial system itself. The government is immense--there are over 100 departments, committees and central bureaus. When there are many temples, naturally there are many Buddhas as well. There is much red-tape, dispute over trivia, passing the buck, and low efficiency. All the industrial sector and their affiliated units, regardless of size, take the attitude of being all-powerful. There are layers upon layers of governmental organizations, duplication of tasks, fragmented division of labor and scattered man-power as well as material and financial resources. These have hindered cooperation and increased cost while lowering efficiency and earnings. To correct this situation and to meet the needs of modernized construction, the industrial system must be reformed.

CPPCC member Wu Zhichao [0702 1807 6389] hoped, "To Conquer the Chaotic Condition of Blindly Introducing New Technology and Foreign Trade."

CPPCC member Wu Zhichao said, "There is a certain amount of blindness in our introducing new technology to the country. Last year, I accompanied four German engineers to Tongling County of Anhui Province. There, they saw two new steel mills standing idle. Reportedly, one mill was not in operation because of pollution; and the other failed to pass a technical inspection. The German engineers said that problems like these should have been solved before hand because a prolonged delay in operation would lead to heavy losses. Later, the German engineers looked over two mine installations which were standing idle. They remarked, 'Your machinery is modern enough, but the mines are not in operation.' In a subsequent symposium, the German engineers first posed a few questions for us to answer. But by the end of August, when the German engineers had completed their reports, the answers still did not come from the affected departments. This year, when I inquired about this matter at the affected departments, I was told that that particular individual in charge had resigned his position. I think we should have been informed of his resignation long ago.

"Concerning foreign trade, a system of centralized management was practiced last year. This year, each province conducts its own sales. As a result,

merchants from Hong Kong and Macao swarm into the country and there is free competition everywhere. The problem is, there is confusion in pricing--merchandise of the same brand is priced differently. As a result, some old customers do not come for return business. Now the foreign merchants are here to discuss business, and the success of a business deal relies much on personal relationship. People have demanded from foreign merchants all kinds of gifts, from cigarette lighters to trucks; some even demand that the foreign business men invite them for visits abroad. This is not a good way to conduct foreign trade.

CPPCC member Zhu Mei expressed much concern and anxiety over the supply of beer. He said, "Our country has plenty of material for making beer, which sells well both domestically and abroad. Although the construction of a brewery involves a large one-time investment, it can be recovered within 1 to 2 years. The municipal government of Beijing has not given it much attention. The current brewery has an annual capacity of only 50,000 tons. To meet the market demand, the brewery must be expanded so that an additional 50,000 tons can be produced annually. To accomplish this, an investment of $9,500,000 yuan is needed, of which $6,500,000 yuan must be invested this year. Besides, the Chamber of Commerce of a certain Central American country has expressed its willingness to help our country build breweries. But the Beijing authorities have so far not responded. If the investment is not made this year, it is certain that there won't be enough beer to drink next year. It is hoped that the City of Beijing gives some attention to this matter."

CPPCC member Ly Dingyi [7120 1353 0001] said, "Emphasis Must Be Given to the Training and Promotion of Young Cadres."

Ly Dingyi said, "Chairman Deng Xiaoping's talk is very important. He urges us to discover, train, and promote as many of our talented young as possible to meet the needs of modern construction. In other words, to open all avenues for people of talent and to allow everyone to develop his talent to the fullest. Now that all the Marxists and patriots of the older generation have been promoted, it is time to promote the young people. During the Cultural Revolution, Lin Biao and the 'gang of four' promoted a group of 'rebels.' One half of the members of the Communist Party joined the party during that period. Now that the 'gang of four' has been crushed, we must promote those who hold inveterate hatred toward the 'gang of four,' who have genuine talent, and are truly educated and are capable of independent thinking. There are such young people among the new members added during this congress. Kuo Weibing [6753 4850 1755] of Harbin is one of them. I hope that the Communist Party and the organizing departments of the other governmental agencies pay attention to this question and promote more young people like him.

"The 'gang of four' was crushed 4 years ago. Since then, various government departments have been busy handling cases of injustice, false accusations, and other residual problems. We hope that the government will now turn its emphasis to promoting those young cadres who have had 10 years of training in Marxism-Leninism. They were in their 20's and 30's when the 'gang of four'

appeared on the stage, and are between 30 and 40 today. They never had a chance to be promoted because during the time of the 'gang of four' there was, in fact, no genuine communism. There was only the 'communism' that was controlled by Lin Biao and the 'gang of four.' They violently opposed the promotion of cadres, and attacked anybody who joined the party. They only promoted those they liked, while persecuting those who opposed them but upheld Marxism-Leninism-Mao Zedong Thought. Many were shot, cruelly put to death by other methods, or persecuted to such a degree that they lost their working ability. Wang Hongwen [3769 3163 2429] said, 'we will see, 10 years from now.' We should never forget this. Now that we have the party of Marxism-Leninism once again, we must seriously promote good people, let them join the party and become cadres (however, not let them rise like helicopters). There are good people among the opportunists and it is all right to let them join in the task. However, primary leadership should be put into the hands of those who have been tested in the Marxism-Leninism-Mao Zedong Thought. Only in this way--and no other way--can we be at ease."

CPPCC member Yan Zhongpin [0917 0022 1627] stated: "There Is Chaos in the Way the Sending of People Abroad Is Managed. Thoughts of Worshipping Things Foreign Have Again Appeared."

CPPCC member Yan Zhongping said, "Today the worship of things foreign is on the rise again. In the eyes of some people, everything that is foreign is good. However, they learn about foreign things only superficially, without knowing the fundamentals. This could develop into a school of the 'Westernist.'" He also said, "Nowadays many people are trying to find an opportunity to go abroad, go sightseeing, and waste foreign exchange. And there is no coordinated plan for sending people abroad. Once at the airport, I saw two separate delegations of color television experts going abroad simultaneously on tours of inspection. Many experts who should go abroad to inspect and to study cannot go; while those who should not are going."

Some CPPCC members pointed out that some students have been sent abroad for further studies before they learned the language of the particular country they went to; and there are other who, once abroad, accept all kinds of gifts. They want everything and anything and are a disgrace for the Chinese people.

CPPCC member Hu Tsuying [5170 1311 1305], Xia Xingshih [1115 5887 2514] and Liu Jinzhe [0491 2516 0772] believed, "The Effectiveness of Intellectuals Must Be Developed to the Fullest so That All Qualified Personnel May Contribute to the Best of Their Ability."

CPPCC member Hu Tsuying said, "In his opening statement, Chairman Deng Xiaoping emphasized the importance of opening all avenues for people of talent and letting qualified individuals contribute their very best. In the progress toward the four modernizations, the questions of developing the broad mass of intellectuals and of the active participation of scientific and technical personnel bear great importance. According to a report of the Economic Research Institute of the National Academy of Social Sciences, the scientific

and technical workers in our nation's industrial and communications systems in 1965 amounted to 5.7 percent of the total work force in these systems, but it decreased to 3.9 percent by 1979--an indication that the number of plants has increased without a proportionate increase of scientific and technical personnel. The statistics of numerous major nations show that the ratios of college graduates for each 10,000 persons are as follows: Japan, 205; France, 190; West Germany, 135; the Soviet Union, 106; India, 40; and China, 10.5. These figures show that the ratio of our country's college graduates is very low. However, the party attaches great importance to the intellectuals and considers them a part of the working class, the best part, in fact. Therefore, the question right now is the implementation of the party's policies toward the intellectuals. Among the members of the China Democratic Construction Association and the All-China Federation of Commerce and Industry, there are quite a few scientific and technical workers and other individuals who have experience in business management. Their effectiveness has yet to be actively developed. For example, some members of the Federation of Commerce and Industry have long been discriminated against by the business world. This attitude has yet to be corrected. And in the society at large, situations where intellectuals suffer discrimination still exist. Our country does not have many scientific and technical workers; we should not squander these talents anymore. We must let them develop, and utilize their talents, to the fullest."

CPPCC member Xia Xingshih said, "40 to 60 percent of the graduates of Shanghai's University of Science and Technology want to change their professions. This is a problem of not utilizing what one has learned and also a problem of not utilizing what has been taught. Some 80 percent of the graduates of the Foreign Language Institute in Arabic languages have not yet been assigned. Similarly, for 3 years in a row, many graduates of the Institute of Oceanography have not found jobs. So the problem lies in not utilizing the many talented people who have had many years of training. Therefore, the task of education must be seriously assessed. The Japanese pay very much attention to education, which results in high efficiency in production. In the past, the work of education has never been put on our regular agenda."

CPPCC member Liu Jinzhue said, "It is important to open all avenues to qualified people and let the talents develop to the fullest. We have the talents but some organizations still hold them back instead of letting them develop. It was only 5 days ago that I heard the story of a college graduate who had majored in astronomy who has been assigned to selling meal tickets. How can we utilize talents this way? What we have now, is a situation where we have many talents who are never called, where we have 'winged-steeds' whom no one appreciates."

CPPCC member Qian Waichang [6929 0251 7022] said, "The Importance Lies in the Discovery and Protection of Talents."

CPPCC member Qian Waichang said, "Chairman Deng, in his opening statement, has pointed out the tasks for the three areas of economy, politics and government in the new 'long march.' This is very important. In the last year we

have accomplished much toward fully developing and utilizing the talents. In our country there are plenty of talents. When papers written by some of the middle-aged people, those between ages 40 and 50, are read in international conference they are found outstanding. We must discover our own talents, instead of letting people in other countries discover them. But the discovery of talents involves a difficult process; and, once they are discovered, they should not be made to attend meetings all over the world. They should be given real scholarly work to do. There was a middle-aged expert in modular mathematics in Shanghai who had some real accomplishments to his credit. But once he had gained recognition, he began to attend meetings everywhere. What good could this do? A scientist is no longer a scientist when he does not work in science. Therefore, when talents are discovered, they must also be conserved."

CPPCC members Qian Fuying [6929 4395 2503] and Zheng Zhengren [6774 2973 0088] appealed, "To Scientists and People With Special Qualifications Not To Take On Too Much Administrative Responsibility."

CPPCC member Qian Fuying said, "It is important to utilize people according to their talents. People in the position of ministers and vice-ministers should be able to comprehend information in science and technology, but they don't have to be experts themselves. It is most important that they have organizational ability, and can organize various individuals and coordinate their opinions and ideas."

CPPCC member Zheng Zhengren said, "The CPPCC must concern itself with determining the policies for the thorough utilization of the intellectuals. So far this work has been carried out well with the upper echelons, but with the middle and lower echelons, it is another matter. There still exists factionalism in some organizations and, in others, the leadership still does not trust the intellectuals. These organizations still give the highest rank to the laborers, next to the farmers, and only then to the intellectuals. Although the intellectuals are no longer placed on the bottom of the ladder, they are not yet given their proper positions."

CPPCC members Su Yuanfu [5685 0337 1778] and Chen Mingshan [7115 0900 3790] said, "It Is Very Important To Open All Avenues to Talented People and Let Everyone Develop His Talent to the Fullest."

CPPCC member Su Yuanfu said, "We must open all avenues to talented individuals and let everyone develop his talent to the fullest, if we want to build our nation into a socialist power that is modern, highly democratic, and highly civilized. Some time ago, people were encouraged to go out to identify individuals and those individuals with such special qualifications and skills were encouraged to volunteer their services. However, not many people with special skills volunteered their services and likewise, not many people went out to serve as 'talent scouts.' The following must be done if people with special qualifications are truly to be discovered: (1) Everybody should be a talent scout. Only in this way can individuals with special qualifications feel that their talents are appreciated; (2) A talent scout must be realistic

and knowledgeable so that he can identify special skills and qualifications; (3) The merits, short-comings, and problems of people with special qualifications must be properly handled; (4) A talent scout must look for qualified individuals not only among those he knows, likes, and has contact with but also among those he does not know or like, because the skills and talents of all people can truly be utilized."

CPPCC member Chen Mingshan said, "During the past year, various policies adopted by the City of Shanghai have been implemented very quickly--the technical personnel who worked previously in the industries of the raw and semi-finished materials and businesses have been placed in technical positions. Without counting the 'three small's' (small merchants, small craftsmen, small business owners) there are 4,724 workers employed in the industries and businesses of raw and semi-finished materials, 6 of these are rated as municipal worker-models, and 433 others as first class advanced productive workers. There are 539 who have joined the labor union. Of the 13,848 retirees, 10 to 20 percent have come out to help develop street collectives, give training to the young people, and actively contribute to the realization of the four modernizations. The problem is that there are not many real talent scouts. Much has to be done toward the identification and promotion of individuals with special qualifications and toward opening all avenues to the full development of talented individuals.

CPPCC member Han Ying [7281 5391] suggested that "the Investment in the Training of Individuals With Special Qualifications Be Increased."

CPPCC member Han Ying said, "To realize the four modernizations, much capital has to be invested in economic construction. Although it is important to introduce the much needed modern technical facilities, the investment in personnel training should not be ignored. The latter is of greater importance, in some sense, because the advanced technical facilities have to be manned by people who have modern technical skills. At present, conditions in our country are lagging far behind those of other countries. In education, the number of college admissions in any particular year is not quite 4 percent of that year's middle school graduates, leaving an absolute majority of middle school graduates without the opportunity for higher learning. This situation is the result of inadequate funds for education on the one hand, and, on the other, the incomplete development (due to many objective reasons) of manpower and facilities for education. Teaching methods in the colleges should be changed--it is inappropriate to teach college students as if they were students in primary schools. At the same time, while the regular day schools are being strengthened, spare time educational facilities must be built, so that the scientific and cultural levels of those youths who are employed, or are awaiting employment, can be promoted. It is also helpful to open vocational schools, providing the young people with technical training before actual employment. This type of work should be vigorously supported. Of course, this requires a certain amount of capital. During recent years, there has been much progress in this area. If we can carry out this task well, our efforts in discovering and training qualified individuals can be actively enhanced."

CPPCC members Zheng Zhong [6774 6850], Shang Dejun [1424 1795 0193], Shang Guorong [0948 4141 2837] and Xiong Jiguang [3574 1323 0362] said "The Most Pressing Task for Now is the Training of All Kinds of Professionals."

CPPCC member Zheng Zhong said, "I work in the field of education. The current question is how to train qualified individuals. There are more than 3,000 students at the Xiamen University, and 5,000 more will be admitted. Although there is quite a number of teachers, very few are capable of real teaching. The quality of the teaching staff is another question. How can a subject be taught well by a number of teachers collectively? And there is the question of equipment—for example, there is not even a modern electronic microscope or an electronic calculator in our department of oceanography. The instruments and facilities are very old. Whenever foreign visitors come, it is always a dilemma whether they should be shown these outdated facilities. And there are not enough books in the library, a result mainly of not having enough foreign exchange. Furthermore, whenever there is a small amount of foreign exchange it is always distributed evenly among the departments, without giving special consideration to the major departments. These problems should be solved as soon as possible. Besides, today the graduate school students have only 3 or 4 years to complete their studies toward a master's or doctor's degree respectively. However, most students do not have a good foundation, and a 3-year period is only enough to provide them with training in the basic subjects. Therefore, I suggest that 3 years should be allowed for master's degree, devoting 2 years to basic subjects and 1 additional year to research. Today, some students get into graduate school based on sheer luck. Their academic record is not that good. I suggest that before admitting a student into graduate school, the entire record of his 4 years in college should be reviewed."

CPPCC member Shang Dejun said, "In the area of traditional Chinese medicine, there is an even more acute temporary shortage of qualified personnel. Some of the current systems are not conducive to the training of talented individuals. For instance, the health department does not have the power of personnel deployment. As a result, the much needed teaching staff is not supplied; while those not in need come, through the back door, by 'pulling strings.' Some have even gotten into the teaching and research group. How can the quality of teaching be promoted this way! Furthermore, there is the unresolved argument about the equipment at the college of traditional Chinese medicine. Some take the position that for teaching traditional Chinese medicine, all you need is three fingers and a small cushion, and that when modern equipment and facilities are used, it is no longer the traditional Chinese medicine. Some even believe that it is against the policy of traditional Chinese medicine to use modern equipment. As far as I am concerned, it will not work this way. In a college of traditional Chinese medicine, a combination of Chinese and western methods should be used. By using modern instruments, better diagnosis can be made, which will lead to better results for the traditional Chinese medical treatments."

CPPCC member Shang Guorong said, "There were 78 traditional Chinese medical doctors before the Cultural Revolution. Now there are only eight left. Therefore, there is a pressing need to train new talents. Our academy has admitted

over 400 new students. But there is no dormitory space for the students or the teachers. So, they all have to live in the inn. Besides, there are not enough teachers. Originally, it was hoped to attract a group of skilled traditional herb doctors to help out with the teaching; but because of organizational limitations, it could not be done." In view of the fact that many overseas Swator people, fellow-countrymen from Taiwan, and people from other nations frequently come to the mainland asking for assistance in traditional Chinese medicine, CPPCC member Sheng Guorong suggested that a traditional Chinese medical clinic be opened in Hong Kong. Such a clinic does not need to be elaborately equipped. It will be a place where much foreign exchange can be earned, contacts can be established with overseas Chinese and with our fellow-countrymen on Taiwan. It will also be helpful to these people in their work."

CPPCC member Xiong Jiguang said, "A very important question today is the training and selecting of qualified individuals who can meet the needs of building a modern country. The silkworm industry is very well developed in the Sichuan Province. This is because Comrade Zhao Tzuyang [6392 1311 2254] has attached great importance to it, and the province has adopted a series of policies and measures which resulted in the rapid development of that industry during the last 2 to 3 years. The production of last year reached 1,400,000 dan [a unit of 50 kilograms] a 40 percent increase from the year before; and this year's production is another 20 percent higher than that of last year, with a forecast of as high as 1,800,000 dan. It has been estimated that by 1985, the annual production will reach 4,000,000 dan, and 5,000,000 dan in 1990. Right now, the mulberry saplings are doing very well; therefore, the target will be reached, perhaps even surpassed. However, there is a shortage of technology. This year, the cocoon production of the Sichuan Province will surpass that of Japan, but its quality is inferior. The facilities in our plants are not complete. Last year, there were more than 1,000,000 dan of cocoon that could not be reeled into silk and had to be sold as cocoons. Our technology for printing and dyeing the silk lags far behind that of Japan. Therefore it is imperative that the scientific research work be strengthened; and that technical personnel be trained. At present, there is only one university in the entire Sichuan Province that has a sericulture department. In the past, the central authorities concentrated on assisting provinces such as Jiansu and Xijian. It is hoped that, in the future, the central authorities, in their national planning, will take into consideration the trend in Sichuan realistically, solve the problem of technical personnel, and overcome our equipment shortages. A concerted effort must be made to further improve the quantity and quality of production so that our products may surpass advanced international standards in every way." In the statement, CPPCC member Xiong Jiguang expressed his confidence in the development of the silkworm industry in Sichuan, and his willingness to support these efforts to the best of his ability.

CPPCC members Li Tiezheng [2621 6993 6927] and Ni Zhengyu [0242 1767 0889] "Suggested the Promotion of Grass-roots Diplomacy and the Early Return of Taiwan to the Embrace of the Fatherland."

CPPCC member Li Tiezheng said, "It is very important to strengthen the CPPCC's people to people diplomatic activities. We must actively initiate contacts

of friendship with other nations. To carry out this task well, it is suggested that the CPPCC set up a committee for foreign relations. Currently, a presidential campaign is going on in the United States. Reagan has suggested maintaining official relations with Taiwan. We can send some people to the United States for visits among the American people, make our views known to them, make friends everywhere, strengthen the friendly relationship between the two peoples, and gain the good will of the broad masses in the United States.

"The connections that the CPPCC members have abroad through their friends or relatives must be exploited to strengthen the contact between the peoples of all nations. They must be utilized to promote and develop friendly relations between our people and the peoples of the other nations."

CPPCC member Ni Zhengyu said, "One of the CPPCC tasks is to work toward the realization of Taiwan's return to the fatherland. There is a great deal to be done and many channels must be explored. There are many scientific and technical workers from Taiwan who reside in foreign countries. Many diplomatic officials from Taiwan have remained abroad because of the severance of diplomatic relations between Taiwan and those countries. Those people have their own way of thinking. We should work on them, make them understand the fatherland and our policies, so that their thinking may be changed and the unification of the fatherland may be expedited."

CPPCC members Zhang Bilai [1728 3968 0717] and Liu Kaiqu [0491 7030 3255] said, "Scholarly Communications with Taiwan Must Be Actively Developed."

CPPCC member Zhang Bilai said, "The realization of Taiwan's return to the fatherland is a very important task. Mao Dun [5403 4160] said, not too long ago, 'We should open up academic exchanges and communications with the scholars in Taiwan. Exchanges on the studies of "The Dreams of the Red Chamber" are particularly useful! Encouragement must be given now to academic circles toward developing this project. It is very possible to have exchanges and communications with the scholars in Taiwan through the studies of "The Dreams of the Red Chamber." The reasons are: (1) Scholars on both sides take "The Dreams of the Red Chamber" as a great treasure of the Chinese cultural heritage, both from the point of view of nationalism and patriotism; and (2) in this novel, scholars on both sides can find a common language of antifeudalism. In fact, communications between the scholars have already begun."

CPPCC member Liu Kaiqu said, "The comrades in our art and sculpture department can contribute very much toward establishing contacts with the scholars in Taiwan. Last year, while visiting Italy and France, I had broad contacts with artists from Taiwan residing in Milan and Paris, respectively. As a matter of fact, it was through me that contacts were reestablished between a Taiwan artist in Paris and his relatives on the mainland. My contacts with them had good results. The Democratic Alliance has many scholars. Therefore this work can be broadly launched."

CPPCC member Li Xingchuan [2621 2502 1157] said "Emphasis Must Be Given to the Work Among the Overseas Chinese."

CPPCC member Li Xingchuan said, "Although much attention has been given to the propaganda work toward Taiwan, there is not enough emphasis given to the propaganda work among the overseas Chinese. There are more than 20,000,000 overseas Chinese in various countries; among them, there are many scientific and technical talents. From one rural community of Taishan alone, there are 28 scholars with doctoral degrees living in the United States. Last year, there were over 400 overseas Chinese who came to Taishan, visiting relatives or for sightseeing. However, they were mostly ordinary citizens and not many of them were of any influence. Quite a number of people do not dare to return because they believe that only those who are politically neutral can have a place in China. The Taiwan government has been trying to get people to penetrate the An Liang Association, Xie Shen Association and other overseas Chinese organizations in the United States. In the United States, most of the principals of the overseas Chinese schools are sent by the Taiwan government. If our propaganda work toward the overseas Chinese is done well, it would have much influence toward Taiwan's return to the fatherland."

CPPCC member Mai He Siu De [6314 0678 5685 1795], Tie I Bo Fu [6993 5902 3034 1133] said, "There Are Some Problems in the Pastoral Areas."

CPPCC member Mai He Su De. Tie I Bo Fu said, "Not too long ago, on an inspection tour to Northern Xinjiang, I witnessed a few problems in the pastoral areas: (1) The problem of chaotically turning pastoral areas into farmland continues. This seriously damages the cultivation of grassland and greatly affects the development of animal husbandry and the people's livelihood. There is much resentment from the people. This problem should be solved with much attention in the future; (2) Up until now, education in the pastoral areas has been limited--with many problems in the number and quality of schools, particularly those of inadequate funds, teachers, and teaching materials. The Xingiang people have much to say about these problems. It is suggested that the departments concerned study and solve these problems. The people in northern Xinjiang were very happy with our inspection tour this time and said that the CPPCC members should go there regularly, solicit the opinions of the masses and conduct investigations and research, so that the real problems may be solved."

CPPCC members Wu Kequing [0702 0344 3237] and Tien Iping [3944 0001 1627] said, "The Protection of Cultural Relics and Historical Sites Is an Urgent Task."

CPPCC member Wu Kequing said, "The fact that the CPPCC has taken up the question of the protection of the cultural relics and historical sites has caught the attention of many segments of the population. This is a meaningful task. Incidents where cultural relics and historical sites are damaged, still exist; some even sustain serious damages." He analyzed the situation and said, "In some cases it is due to the lack of recognition of the importance of protecting the cultural relics and historical sites on the part of the local leadership. For example, in Ron County of Guangsi Province, the digging of air-raid shelters directly under an ancient historical site resulted in crevices on the grounds of the site. Immediate actions had to be taken to remedy

the situation. In another instance, some ancient tombs were leveled by bulldozers to create farmland. Many historical sites in Guilin have also been damaged. It would be helpful to the work on the local levels if the CPPCC members could organize some investigative work, and offer some suggestions."

CPPCC member Tien Iping pointed out, "Situations still exist in Sichuan Province where cultural relics and historical sites suffer serious damages. For instance, the Great Buddha Temple of the Happy Mountain, forests and the temples of Emai should be saved through organized efforts. The restoration of the historical sites at the Emai Mountain should be directly led by the people and government of Sichuan Province. Furthermore, all avenues should be opened to making these sites profitable--that is to say 'to maintain mountains by utilizing mountains,' making use of locally produced materials, increasing revenues, gaining time and bringing the restoration work to completion as soon as possible."

CPPCC member Dan Shihyuan [0830A 1102 0337] maintained, "In the Process of Developing Tourism, the Original Appearance of Historical Buildings and Ancient Gardens Must Be Protected."

CPPCC member Dan Shihyuan noted, "Earning foreign exchange through the development of tourism has been known as the 'smokeless industry.' But the ancient buildings and edifices as well as the ancient gardens and forests are an important form of 'capital' for attracting people from abroad to come to China. The way tourism is being developed today is like 'killing the hen to get the eggs.' Areas for sightseeing and of scenic beauty have been changed beyond recognition. The cablecar tracks that have been added to the Nan Tien Gate at the Tai Mountain have seriously damaged the scenery; restaurants have been built along the seven-mile corridor of stone-carving of animals and people at the Thirteen Ming Tombs; and there are plans for a 13-storied tall building in Sian competing in height with the Pagoda of the Wild Goose--Suzhou, Hangzhou and Guilin all have similar problems. It is to be hoped that laws concerning the cultural artifacts will be promulgated at the earliest possible date. In relation to architecture, it is suggested that Beijing, Jiansu, Zhejian, Fujian, Shansi, Gansu and other areas preserve some of the residential buildings that have the local or national characteristics; for example, Beijing's residential compound with houses around a yard. Otherwise, the residential buildings and houses would look alike from Heilongjiang in the north all the way to Hai Nan Island in the south."

CPPCC member Ye Qianyu [0673 3239 0056] said, "Improvements Have To Be Made on the Publication, Distribution and Collection of Books and Paintings."

CPPCC member Ye Qianyu said, "Today, the fate of publishing and distributing books and paintings is in the hands of the Sin Hua Book Store. For many books, there are not enough copies for distribution, because the Sin Hua Book Store either did not send in the order or ordered only a limited number. As a result, readers cannot get the books. Is it possible that a system of direct contact between producers and consumers can be adopted, as it has been adopted by the industrial plants, and leave the decision of publication and distribution to the publishers?

"There is a more serious problem: The markets at Liu Li Chang for books, paintings and other cultural items are only open to foreigners; while the Chinese are not allowed to read them or even to browse around. The treasures of the Imperial Palaces are the collections of the Chinese people. It is very important that they be preserved for the people and opened to the people, so that the tradition of collecting books, paintings and other cultural items by the people may be continued. However, fraudulent purchases may appear as a result. How can this problem be solved? It is to be hoped that the concerned sectors make a serious study of this."

9523
CSO: 4005

PARTY AND STATE

HISTORY, CHARACTER OF ZHAO ZIYANG REVIEWED

Hongkong DONG XI FANG [EAST AND WEST] in Chinese No 21, 10 Sep 80 pp 4-8

[Article by Jin Zhiming [0093 0037 7686], "Zhao Ziyang, What Kind of a Person Is He?"]

[Text] Zhao Ziyang was born in 1919 in Huaxian County, Henan Province, into a landlord family. His original name was Zhao Xiusheng, he also had the name Zhao Ye. In 1932, at the age of 13, he joined the Communist Youth League. In 1938, at the age of 18, he became a member of the CCP. During the War of Resistance Against Japan he served as county party secretary and prefectural party secretary in the Hebei-Shandong-Henan Anti-Japanese Base Area. In the early period of the War of Liberation he served as party secretary of the Tongbo area. In 1951, he went south to Guangzhou, following that scholar-type Tao Zhu, and participated in land reform work there. At the conclusion of the land reform, Tao Zhu and Qu Mengjue promoted him to head the Department of Rural Affairs. He then advanced step by step to deputy secretary of the CCP Central Committee's South China Sub-Bureau, secretary of the Guangdong Provincial Party Committee and first secretary of that committee. During the cultural revolution he was criticized and denounced. When the revolutionary rebels gained power, he kept out of their way but continued to wield actual power. When the Revolutionary Committee of Guangdong Province was formed, he was pushed out of his post. In 1971 he was "liberated" and sent to Inner Mongolia as a party secretary in charge of agriculture. Later he was again returned to Guangdong to become provincial party secretary and first secretary. From 1975 on, he has been first secretary of the Sichuan Provincial Party Committee, First Political Commissar of the Chengdu PLA units, Vice-Chairman of the Chinese People's Political Consultative Conference, Member of the 10th and 11th CCP Central Committee, Alternate Member of the Politburo, and in February 1980 he was elected Member of the Politburo and Vice-Premier of the State Council.

A Capable Administrator of Great Adaptability

A good administrator must show adaptability. In changing circumstances and in the changes occurring at his working place he must be able to understand and grasp as quickly as possible the new conditions and the new situation with all its special aspects to realize what is beneficial and what is harmful and also to determine plans of action and measures to be taken. He must also be skillful in selecting personnel, in checking and summarizing work, etc. These are all qualities required in a good administrator. Adaptability is even more distinctly required in an administrator who is engaged in political work. Especially in a country like

China amidst its power struggles and its fickle uncertainties, it is even more important to command the necessary adaptability when dealing with the struggle against opponent parties. In the course of growth and decline of the various mutually opposing parties, he should be able to disregard any scars of the past and adapt to any shifts in power while preserving his own position and pursuing his original policies. Premier Zhou Enlai was a past master in this respect; Zhao Ziyang is also not a bad operator. Let us see how he fared during the past few years: In a political organization that had the overthrow of the landlord class as its revolutionary objective, this young student, coming from a landlord class family, had managed only one or two years after joining the party to hold the top position in this organization's provincial and local committees, namely that of provincial and local party secretary. Although the status principle--in respect to his landlord class origin--was not followed to the extreme in the early days of the War of Resistance, as it was followed later during the cultural revolution, the ideology of the communist party after all regarded the landlord class as enemy. Furthermore, the bases of the communist party were not very extensive in those days, so that becoming local party secretary must have been not easy at all. By changing his class status right at the start, Zhao Ziyang has given an outstanding demonstration of his adaptability to a new political situation.

After moving to Guangdong and participating in the land reform, Zhao was pronounced an expert in land reform. After his handling of rural affairs, he was pronounced an expert in agricultural matters, and again, after sticking it out for 4 or 5 years in Sichuan, he was also given the honorable designation of expert economist. Whatever line he went into, he mastered it well; he has indeed the talent of becoming master in whatever line he goes into. This is due to his ability to recognize and grasp the situation (the true state of the objective conditions). Men who have this ability can fairly easily master new, more elevated and more complex work. This capability is to be highly valued in Zhao Ziyang, now that he has been elected to the position of vice chairman of the standing committee of the state council--in essence premier and head of government.

At all times and in all countries successful politicians have been mainly those who were skillful in recognizing the signs of the time and understanding the political fluctuations on which to base an appropriate strategy, and who, in the course of these fluctuations, were able to preserve or even enhance their own position and power. Rash and straight forward characters or unyielding scholarly types are swallowed up in the political whirlpool; they will certainly have all their bones broken and come to a bad end.

Zhao Ziyang is a past master in achieving success one way or the other, he has an outstanding talent in recognizing the trends of the time. Tao Zhu committed errors of a historical nature by launching with excessive fury into the land reform, the anti-rightist, anti-reactionary, and the anti-localist movements. With his scholarly temperament, Tao Zhu showed respect and solicitude toward the Guangdong intelligentsia. (This writer had the good fortune to have been one of the nine veteran "fragrants" [writers of literature favored by the party] when Guangdong was under Tao Zhu's leadership--in the early sixties Guangdong intellectuals were quite "fragrant," as compared with the rest of the country.) Zhao Ziyang too had done some work placating the intellectuals. These had merely been some of Zhao's rudimentary products of trying to gain advantages in whatever way that

offered itself. When the cultural revolution came, Zhao gave a marvellous show; while all streets and lanes in Guangzhou were full of slogans and big-character posters "Down With Guangdong's Biggest Capitalist-Roader Zhao Ziyang," the provincial secretary was still none other than Zhao Ziyang. Zhao was still exercising his powers. The Provincial Revolutionary Rebels' Allied Committee, in which the Zhongshan University Red Flag, the Guangzhou Workers Alliance and similar groups played leading roles, staged the "January 22 seize-power." At that time Zhou Enlai telegraphed his approval of the direction taken in the "January 22 seize-power" by the Provincial Revolutionary Allied Committee. However, in contrast to other provinces, Zhao Ziyang was not divested of his powers. Zhao realized clearly that the Provincial Revolutionary Alliance within the Red Flag Group lacked experience and real power. He also realized the contradictions between the Provincial Revolutionary Alliance and the Triple Alliance Faction, in which Hua Gong and Red Flag Workers groups were leading, on the one hand, and the Allied General Group, in which the Local General group and the "Ism Soldiers" faction were leading, on the other hand. When the revolutionary small generals rushed in at midnight to "seize power," Zhao against all expectations obediently like a good boy handed over the "political power," i.e., the seal of the provincial secretary. Zhao then performed a unique stroke: the provincial party secretary started to perform his duties "collectively" under the guidance of the revolutionary small generals. He thus tricked the students in general, who were under the leadership of Wu Chuanbin. In the big struggle between the three factions, the real power was still in Zhao Ziyang's hands. This situation lasted until the army interfered at the military barracks. The Provincial Revolutionary Allied Committee's "seize-power," being nothing else but a "seize-seal" action, made this affair look like a joke.

Zhao Ziyang gave another superb performance during the cultural revolution. In general, veteran cadres did one of the following three things during the cultural revolution: one was to stay in bed and refuse further responsibilities, like provincial party committee member Lin Jiangyun and others, who declared themselves superannuated and on their own initiative quit their jobs. Even senior party member Zhu De went home to tend to his orchids. Another way was to become opportunistic and change course. This was what Wang Xiaoyu of Shandong, Pan Fusheng of Liaoning, Lin Liming and Zhao Zhuoyun of Guangdong and others did. All these opportunists have by today concluded their political careers. Probably most of them are still in prison writing self-criticisms. Another group were hard-headed unyielding types who would fight back against the red guards. There were Tao Zhu, He Long, Wu Han, all showed backbone and guts, but, alas, they jeopardized their lives. When faced with the three parties in Guangdong, Zhao Ziyang did just the right thing. He did not resist the three groups and also did not support any one of the three groups. All three were somehow disgruntled with him, but none of the three came to hate him. As a consequence, he did not get to suffer much although he was dragged out, criticized, denounced and paraded through the streets. While protecting himself, Zhao firmly stuck to his post. This after all showed that he placed his public responsibilities to the people above his private interests. This praiseworthy trait of character is of important significance for the future advancements in his career and the trust that people put in him.

Yet another thing: at the time when the "gang of four" came into power, Zhao Ziyang had gone to Inner Mongolia as party secretary. In the time of the "gang

of four" he had returned to Guangdong like a [illegible] fish come to life again to become first secretary of the provincial party committee, and also during the time of the "gang of four" he had gone to Sichuan to administer that province. Nevertheless, during the years and months of the stormy period of Jiang Qing's "oppose rightist case-reversing wind" and "Criticize Deng" movement, Zhao Ziyang seems to have already been a target of Jiang Qing's attacks against the sinister xiu-cai [anti-Maoist intellectuals]. However, Zhao did not scamper away like the monkeys when their tree is felled, following the downfall of Deng Xiaoping. Thereafter we observe that, although Zhao was not liked by Jiang Qing, he never aroused her hatred to the extent that Deng did, a hatred that could only be assuaged by the destruction of its target. This shows that Zhao could handle the "gang of four" in a perfunctory way, and since Zhao did not fall as Deng did, it also shows that Zhao never tied his own fate to the policies of any other person.

In summary we observe that Zhao had always been able to smoothly cope with the various leftist and ultra-leftist political movements. He would commit the mistakes that were the mistakes of the times, but he would not commit mistakes that could be blamed on him personally. Thus, he could safeguard himself and improve himself. Before Zhao took charge of one department or became head of one faction, he has had the tendency to attach himself to a certain faction, but he never made his attachment to any party a matter of life and death. He therefore always preserved his freedom and free mobility. This is one of the characteristics that Zhao has shown throughout the political struggles of the past.

Steady and Correct Judgment

The above statements demonstrate clearly Zhao's firmness, devoid of rashness in his actions, and his perfect judgment that never let him commit a mistake, but these facts reflect Zhao's actions as one-sidedly conservative and passive. Due to the restrictions of time and place, none of his speeches or actions were of an earthshaking nature. However, he certainly is not a man who merely echoes what others say or a mouthpiece for others, or a machine without ideas and thoughts of his own. At the right opportunity and under conditions that assure success, Zhao can perform amazing actions, you will have to admit that when you meet up with such.

The first example: Although the "Whatever Faction" was "rectified" into a stage of utter dejection at the third plenum of the CCP Central Committee, that party revived in the spring of 1979. Firstly, the expected results have not been forthcoming in the punitive struggle by the Deng party against Guangdong. Then the many problems in the economic adjustment are far from ideal, and finally linking all levels together, there is an evil, anti-Central Committee wind blowing. (According to the report given by Hu Jiwei in September 1979 at the Central Party School, there were the following typical occurrences:

Two county party secretaries, under the guidance of their district party secretary, stated: "The third plenum of the CCP took so far only 90 days. If it proclaimed the cultural revolution to have been one big calamity, the past 90 days are also one big calamity, worse than the 10 years of cultural revolution. What we have now is an adverse wind of a thousand miles." There was also the head of a

provincial propaganda department who said: "Where is China going? Where is Deng taking China? What is Hu Yaobang up to? Hu Yaobang is a revisionist of the old order.") In general big-character posters and written slogans have made their appearance proclaiming to be pro-Mao and anti-the two Hu (Hu Yaobang and Hu Qiaomu)--no frantic anti-Deng Xiaoping wind blowing yet. This spring, with its sudden warmth turned cold again, the "Whatever Faction" launched its attacks, with such uncanny calls as "the flag has been struck down" and "things have gone too far," to which the literary circles added their "Ge-de [Goethe], que-de [lack of virtue], xiang-qian-kan [eyes front!]. For one period of time the people on the mainland were nervous, worried and uncertain in their minds as to what was going to happen, whether the cultural revolution was starting up again.

In this situation Deng Xiaoping gave out the "Four Items To Uphold," which got Hu Yaobang, the target of all attacks, into great difficulties. It looked as if the heavens would fall in. At this moment Zhao Ziyang rushed into battle to intervene. On 23 May 1979 the RENMIN RIBAO published an article entitled "Comrade Zhao Ziyang at a Plenary Meeting of the Sichuan Provincial Party Committee Emphatically Urged To Unify Ideology Inside and Outside the Party in the Spirit of the Third Plenary of the CCP Central Committee." Zhao Ziyang firmly pointed out: "There is a small group of people, badly poisoned by Lin Biao and the "gang of four," who with open eyes fail to see the excellent situation that followed the Third Plenary Session of the CCP Central Committee, and who even go so far as to put the blame on the third plenary for problems that arose in preceding periods. This trend of thought is the upshoot of an ultra-leftist tendency, which easily tempts and misleads people. ...The profound historical significance of the third plenary of the CCP Central Committee and its correct stand cannot be explained merely by achievements of only a few months. We must lead the people to a higher platform from which to view farther ahead and have them gain a deeper understanding of the spirit of the third plenary of the CCP Central Committee." Although there is much hackneyed part cliche in this statement, the statement, targeted as it was and issued in the name of the party in full power over an area populated by 100 million people, cannot be dismissed as mere cliche. The bombardment which was thus directed by Zhao Ziyang, the local party in power, against the "Whatever Faction" could not possibly be withstood by Wang Dongxing and the others of that party system which had already begun to crumble. By further repeated attacks soon afterwards by such men as Wan Li and Ren Zhongyi, the situation quickly changed. Wang Dongxing's cold spring turned into the warm spring scene of Deng Xiaoping. Through this battle, Deng Xiaoping's prestige rose high like the sun at noon, and this laid the foundation for his move into the Zhongnanhai, the central government quarters.

The other incident was Zhao Ziyang's courageous statement on the theoretical plane: "The purpose of developing production is to improve the people's livelihood." The formulation over the past years had been: "Production is for the revolution." Zhao was the first to spell out what the people have had in their minds but would not dare say. This was extremely significant, a move to stir up popular enthusiasm for the four modernizations and to reduce mistakes or mishaps in the work of construction. Zhao's statement was followed by articles in the communist press on the theme of "cure poverty, gain prosperity." Now it has even been determined as the party's general line that "to build up high-level material civilization and democracy is the purpose of constructing socialism." In spite of these facts, Zhao never gave the impression of being a great talent in the field of political theory, but he certainly must be credited with no small a share in establishing the new theoretical structure.

The Good Administration of Sichuan Province

Zhao Ziyang's achievements during his administration of Sichuan can be vividly illustrated by the following: a catastrophic disaster area where a coupon for 30 jin of grain could be exchanged for a young girl was turned into a well-adjusted world where a 0.10 yuan bonus was paid with the purchase of every jin of pork. No other concrete measures were employed than to liberate the minds of the people, to show concern for the peasants, to gain an understanding of the conditions and appropriately loosen up political policies; in short: from strangulation to relaxation, from relaxation to revival. Some have expressed the opinion that since Zhao Ziyang could successfully administer Sichuan, he must be able to administer the whole country equally successfully. This, we are afraid, is a somewhat lopsided deduction. The successful administration of Sichuan was an act of revival, just like healing a wounded person and restoring his health. It merely required careful nursing and then was bound to result in the restoration of full health. Zhao was considerably more skillful in the healing process and restoration of health was therefore faster, but that was all. When it comes to "healing" the country, it is not only restoring health to a wounded body but also a case of turning the weak body into a strong body, of developing and of building up. That is quite a different thing from successfully administering the province of Sichuan.

Our confidence that Zhao Ziyang can successfully govern the country is built on the adaptability which he has shown in the past, concretely demonstrated in his capacity for administration, organization and good judgment, as well as in a certain level of theoretical capability and courage.

True Revolutionary Quality

The "revolution" referred to here does not mean at all the stereotype cultural revolution or the "grasp revolution to promote production." It is meant to refer to turning ossified and declining things and thoughts into such full of vitality and progressiveness. Zhao demonstrated revolutionary quality of this kind only after the overthrow of the "gang of four." The reason for this is partly--as already referred to in the above--his character of "treading the middle road," trying to gain successes by whatever means and of taking a steady, unconspicuous course. Another reason is that under the strict ultra-leftist ideological control of Mao Zedong a member of the communist party was just not able to think independently. This was so after the Zunyi Conference, it was very strictly so after the establishment of the communist regime and it reached its climax during the cultural revolution. There is sufficient evidence for this, starting with the period of "unanimity" down to the treatment accorded to Peng Dehuai, Liu Shaoqi and Deng Xiaoping. Much less would a man like Zhao Ziyang show independence, he definitely would not demonstrate it like Peng Dehuai. Following the overthrow of the "gang of four," Mao Zedong's saintliness had ceased to exist for all practical purposes, and the Zhao Ziyang ideology with its sharp observation and clarity of judgment experienced a fairly widespread liberation. The principle of "single decision, single action" was given free play, urging everyone to take the first step in [illegible]. This spirit and courage of "taking the first step" was very important in the CCP leadership. In the past, no one would have dared to step one step ahead of Mao Zedong. Now it has been done; this was an action amounting to rebellion. The very spirit and courage of it increased the people's approval for Zhao Ziyang to move into the Zhongnanhai grounds.

Zhao Ziyang presumably [illegible] the criticism of the Liu Shaoqi-Deng Xiaoping line by the "gang of four" as contained in their indictment of these men, and then acted in exactly the opposite way, that is by just "taking a first step." The commune members are to have their private plots and are to develop free marketing, even to fix farm output quotas for each household. In industry, autonomy was expanded, management is to be independent and enterprises are to be responsible for their own profits and losses. As a result, production experienced recovery and further development. We wish to point out in particular Zhao Ziyang's revolutionary actions in the state council. For instance he views the political power on the mainland under the separate sectors of party affairs, military affairs, politics and law, administrative affairs, etc. At present the most revolutionary atmosphere prevails in the [illegible] departments in the state council. There are two things worth noting there: since Zhao Ziyang took charge of the state council: One is that he finally put down the Da Zhai "red flag," this ultra-leftist model on the agricultural front which Hua Guofeng strongly promoted and protected. Secondly, he got rid of the "petroleum faction" which capitalized on the Da Qing spirit and on all other petroindustrial establishments and which was about to introduce, actively and steadily, ultra-leftist tendencies into the industrial front.

In a previous article, this writer has pointed out that the power struggle among the ranks of the present communist party is still continuing, and that this struggle is not at all epitomized by the struggle between the "All Correct" faction and the empiricists. Today's struggle among the Chinese communists has entered the stage of a struggle between a one-sidedly reformist and a one-sidedly conservative party. The theoretical and practical significance of this struggle is hardly less important than the struggle between the "Whatever Faction" and the leftist extremists. Frequently, commentary by the people on the mainland is: "In the past we had a cultural revolution with bloodshed, now we have a cultural revolution without bloodshed." This talk about a "cultural revolution without bloodshed" does not refer to the terrorism against the ultra-leftists and against the "Whatever Faction", a revolution that has already been basically concluded, but rather refers to the various new formulations in the field of political theory (democracy is the objective not a means, the ultimate aim of construction is a socialist society with a high degree of democracy and a high degree of culture, the objective of production is to improve the livelihood of the people, emphasis on anti-feudalism, criticism of attributing an exaggerated function to the spiritual, affirmative attitude toward humanitarianism, etc., etc.). As to changes in personnel, there are indications that all conservative and rigid, old men like Hua Guofeng, Ye Jianying, down to Chen Yonggui will all gradually be pushed out from all levels of power. This again is viewed by the people as a "cultural revolution without bloodshed," which indicates the gravity of the matter. In this struggle Zhao Ziyang will be one of the key figures. The struggle has just started and conclusions as to its outcome cannot yet be drawn, but it certainly deserves the close attention by anyone concerned about the affairs of that country. Of course great importance must be attributed to the role of Zhao Ziyang, especially at this time when the main battleground is the state council of which Zhao is now in charge.

Inquiring Into Some Related Questions

Firstly, it is said that Zhao Ziyang is basically an uncouth soldier of the Chinese communist Eighth Route Army; how can a man like that be guide in the four Modernizations? He is unfit to become premier of the state council.

People who raise this question consider the fact that Zhao was only a middle school student, later he was campaigning up and down the country. Although he has had experience in political and administrative work, also in military and military-political work, he lacks knowledge of modern science. How can a man who is so completely ignorant of modern science and technology guide China in realizing the four modernizations?

There is some reason on the side of those questioning in this way. In general, leadership in the work of modernization is not possible without modern know-how. However, looking at this problem from another angle: in the present Chinese communist highest leadership there is indeed one peasant, but is there one with modern scientific and technological knowledge? Don't look, there is none. There is therefore no practical meaning in putting forth this requirement, because it would be unrealistic to ask now for the removal of the Chinese communist leadership or to have the intellectuals share in the highest state power. At present it is already pretty good that the Chinese communists, as a first step, listen to and accept the advice and proposals of experts.

Speaking again of Zhao Ziyang personally, his promotions did not come about as in the case of Wang Hongwen, who shot up like a rocket, also not like Hua Kuofeng's, relying on the good graces of Mao Zedong in ascending to the most venerable position and finally getting there through an arrangement that was a "blunder" of history. Zhao Ziyang had climbed up step by step relying only on his own ability. Toward the end of the fifties all units and agencies of Guangdong Province and Guangzhou Municipality spread the tale that "as Zhao Ziyang became provincial party secretary at 18, he has been the youngest provincial party secretary ever, throughout the whole country." This reveals a kind of acclaim and admiration and shows that Zhao Ziyang's ability was widely acknowledged. Today his talents are even more clearly revealed to us, especially, as we mentioned before, his adaptability. If Zhao Ziyang, now in command of the state council, is able under the new political conditions to heed the opinions of Chinese and foreign experts, if he is able to use correct judgment in assessing capitalist and socialist institutions, being eclectic in selecting their good points and rejecting their shortcomings, and march forward on a Chinese road to building up the country, this already would be a very good fortune for China indeed. However, this is nothing but our subjective wish. Whether Zhao Ziyang, objectively, will conform to our subjective wish, only the future will allow this conclusion.

Secondly, it is said that Zhao Ziyang is a member of the Mao Zedong party, a member of the communist party which is basically acting in the old, rigid ways, the party of Marxism-Leninism and Mao Zodong Thought, which is all incompatible with modernizations. Zhao Ziyang in this sense is also a man of the rigid old ideology.

Let me refer you to recent speeches by Zhao Ziyang: "To uphold the four basic principles, to eliminate interferences from right and left, to progress in the emancipation of our minds, to preserve stability and unity, these are the most important preconditions for the effective realization of the four modernizations to be achieved by dedicating heart and soul to the cause, by going all out in our efforts and by concentrating all our energy on the task." "The great achievements in our socialist revolution and in our socialist construction over the last 30 years have been accomplished by upholding the four basic principles. Now that we can summarize past experiences and lessons in working for the four modernizations, we

shall also rely on the strength of the four basic principles." "We must preserve the authority of the party, preserve the trust in the collective leadership of the party committees." "We must resolutely suppress sabotage by all kinds of anti-socialist elements. Social chaos would result if we do not meet out punishment to that small group of bad people who oppose the leadership of the party, who vainly attempt to overthrow the dictatorship of the proletariat and try to destroy the socialist system."

Does this not sound like the typical ultra-leftist stereotype full of the spirit of the "gang of four?"

There is reason in asking this question. Zhao Ziyang is indeed a member of the Chinese communist party, furthermore a typical member of the Chinese communist party Mao Zedong-style. The other Chinese communist leaders are also all this type of party members. They look upon the guidance of the party, the authority of the party, the interests of the party (the exclusive benefits from the one-party system) as their very life, as a holy inviolate dogma. This dogma must not be doubted or disputed. The four basic principles cannot pass the test of practice but they are still to maintain the "correct standpoint." The only possible way therefore is to designate this dogma as a forbidden zone and to turn the dogma into something like a divine revelation and holy bible.

Zhao Ziyang will speak in this manner and the other leaders will also speak in this manner. It expresses the true nature of the party spirit of the communist party member. Mao Zedong, Liu Shaoqi, the "gang of four," Zhou Enlai, Deng Xiaoping... they are all imbued with this "true nature." Party spirit is the common nature of the communist party, but the party members are also human beings, each with his individuality. Due to their differences in historical experiences, backgrounds and ideological conditions, there sprang up a much more vivid and lively political situation, once the mythical fetters of Mao Zedong were thrown off and after the emancipation of minds. As a consequence, new theories (formulations) and new measures of reform were set forth. We have already emphasized Zhao's commendable quality of daring "to take the first step." If Zhao would also be able and willing in future to maintain the spirit and muster the courage of "taking a first step," this would already be an extraordinary achievement. More "first steps forward" will bring more reforms, more progress and probably more improvements in the livelihood of the people.

To Be Considered Conclusions

Our inquiry into Zhao Ziyang can only say: this is what he was, this is what he is now and this is what he will "possibly" be like in future, but there cannot be certainty in our predictions.

If 9 years ago, at the time of the "gang of four," someone would have expressed the hope that the CCP would come up with something like the present political theories (negating the cultural revolution, dedeification of Mao Zedong, democracy as objective, improvement of the livelihood of the people as objective of production development, etc.) or if someone would have predicted the present reforms, it would all have been considered the fantasies of a madman, impossible of realization. In the end, people now regard it as a possibility that originally had been extant and accept it as a natural development. If someone would now suggest that the CCP will institute supervisory controls by the people and a genuine democracy, this

would similarly be regarded as the views of a cloistered bookworm who engages in wishful thinking. If tomorrow these ideas would become reality, then of course all those post-factum theoretists will dig out a thousand reasons in proof of the inevitability of these developments.

Be sure not to mistake and not to interpret this writer as believing that the Chinese communists will on their own initiative lay down their butcher knives and immediately turn into Buddhas, or that they will, on their own initiative, hand the government over to the people or relinquish their exclusive benefits from their one-party rule.

The opinion of this writer is that all things in the world are subject to change. Changes may go against the wishes of the people but may also go in conformity with the wishes of the people. The Chinese communists could possibly slide further down along the dictatorial road of Mao Zedong, hostile to the people, or they could possibly advance on the broad road of people's democracy.

In the opinion of this writer, if the Chinese communists would slide down further toward dictatorship this would be a conscious move in conformity with their natural instincts. Any move toward the people could only be a passive move under compulsion.

It cannot be denied that the general tendency of the Chinese communists after the overthrow of the "gang of four" was toward the people. What compelled the Chinese communists to move in the direction of the people? It was an effect of the communist party itself and the great calamity of Mao Zedong and the "gang of four." It was the conservative force that stood in the way of progress. It was the rapid decline witnessed in the various socialist countries of the world. It was the capitalist world that was still full of vitality although Marx had condemned it to death. It was the present high degree of technological achievements in the capitalist world, its high level of material civilization and high degree of democracy. It was pressure from the upsurge of democratic ideology in the world and pressure of foreign press opinion on the Chinese communists. All these factors caused the Chinese communists to sober up somewhat. The Chinese communists had already by themselves turned into a blind alley. To retreat from this alley would be the way toward a people's world. As it looks now it seems the Chinese communists are still wavering undecidedly at the entrance of the blind alley. To induce the Chinese communists to retreat from the blind alley would need strengthening all those factors that would be apt to bring them back to reason and motivate them to reform, particularly strengthening the internal democratic forces, in order to compel the Chinese communists to tend toward the people, to make common cause with the people, to capitualte to the people.

It is from this viewpoint that this writer has analyzed Zhao's characteristics and his trends of thought, adding speculations about his future actions.

In the past there has never been a savior, the people had to rely on their own strength to save themselves. The future of our fatherland and the well-being of its people can be only secured by having the people rely on their own strength. It would be unrealistic to entrust all hopes on a particular individual or a particular party. The country is the people's country, it does not belong to any particular individual or any particular political party!

19 August 1980

8453
CSO: 4005

PARTY AND STATE

IMPORTANCE OF PROPER TRAINING FOR YOUNG WORKERS STRESSED

Beijing GUANGMING RIBAO in Chinese 28 Aug 80 p 2

[Article: "Looking at the Mainstream of the Young Generation"]

[Text] In a seminar on political thought work held jointly by the No 1 Bureau of the Machine-Building Industry and the National Machinery Association, a factory in Beijing told of its activities regarding the thinking of its young workers and its incentive program.

The number of young workers (under 28 years old) in the factory is 3,548, comprising 48.3 percent of the factory's total. In a few major production divisions, their proportion is even greater: 60 percent in the mechanical and metallic engineering divisions, and over 70 percent in the steel division. There are a total of 1,045 team members in the factory. They make up about 15 percent of the total number of workers, or 29.4 percent of all young workers in the factory. This means that educating young workers is a very important part of political thought work.

The number of young workers continues to increase. Under the guidance of the party and team organizations of various levels, and having gone through the training and examination of the programs in the factory, 277 comrades have joined the Chinese Communist Party. This group comprises 8 percent of the factory's young workers. Some 388 comrades have been selected and trained as management cadres in divisions and laboratories; they make up 11 percent of all young factory workers. In addition, 24 comrades have been promoted to middle-level leadership cadres. Last year, 1,151 young workers were named advanced workers; they comprised 46.3 percent of all advance workers in the factory. In addition, 243 comrades (or 7 percent of the total) have successfully gained entrance into universities or the workers' college organized by the factory. There are a total of 646 group and team leaders in all the divisions of the factory, and 23 percent of them (193 persons) are young people who have joined the plant since 1970. Take the steel division, for example: most of the boiler leaders are high school graduates who have joined the factory since 1970.

As the above figures show, young workers occupy a very important role. They not only constitute a major labor force in production, but they have become a main force in the plant as a whole.

Of course, we can see from the survey below that during the 10 years of destruction brought about by Lin Biao and the "gang of four," crimes committed by the young workers in the factory were shocking.

The factory conducted a survey and received 482 unsigned reports. Some of the questionnaires were fully answered, while others were only partially completed. Some respondents gave more than one answer to a question. Hence, it is impossible to calculate percentages. Nevertheless, after some grouping and organization, we can still gage the minds of the young workers in the factory.

Question 1 in the survey was: What are you most concerned about? Some 315 persons replied that they were most concerned about what would become of China. They wanted the four modernizations to be realized, and they wanted their factory to become an advanced organization. Another 141 persons said that they were most concerned about their promotion, salary, and fringe benefits, while 26 replied that they were not concerned about anything at all.

Question 2 in the survey was: What are you most interested in? Some 254 respondents said that they were most interested in science and technology, cultural knowledge, social unity and stability, pragmatism, moral integrity, and altruism. Another 58 said that they were most interested in a quiet life and a satisfactory job; 39 were interested in democracy, freedom, music, travel, free time, life in general, and good friends; 18 were interested in themselves and their sons and daughters; and 57 expressed no interests whatsoever.

Question 3 was: What do you detest most? Some 334 replied that they detested Lin Biao and the "gang of four" for destroying social stability and unity. Another 95 detested incorrect attitudes within the party, special privileges and favors, and the bureaucratic mentality. A total of 32 detested people who live on socialism but do nothing and remain idle. 5 persons said that they detested war, disease, and inflation; while 13 did not care.

Question 4 was: What are your most pressing needs? Question 5 was: What are your major problems? Some 244 replied that they were in need of knowledge and expertise, educational opportunities offered by the factory, strong willpower and perseverance, a nice learning environment, and plenty of time. Another 99 said that they wanted a house, money, and a mate, while 35 respondents expressed no desire for anything. With reference to major problems in life, 237 cited lack of knowledge and leisure time, the housing shortage, crowding on public transportation, the inability to secure adequate furniture, no money and no suitable mate. Another 242 said that their major

problems were separation from their spouse owing to different work locations, chronic illness, dissatisfaction with their work, and spiritual emptiness; 78 did not report any problems.

Question 6 was: What do you do during your leisure time? We can see from the answers to this question that 245 make use of their leisure time learning science, technology, culture, foreign languages, and literature. Some 134 spend their leisure time doing housework, laundry, cooking, taking care of their children, and making their own furniture; 52 spend their time watching television and movies; 75 replied that they do not do anything.

Question 7 was: Do you think that the four modernizations can be realized? A total 337 said that they were hopeful and expressed confidence; 55 persons said that there were many difficulties and gaps and that they were not optimistic; while some respondents considered the question poorly devised and said they could not give a definite answer.

Question 8 was: What do you think are the major stumbling blocks for the four modernizations? Some 146 identified problems such as the low level of technology, bad management, and the lack of experts. Another 152 cited problems such as bureaucratic attitudes, work inefficiency, and the inertia of old and undesirable work habits. Still another 46 mentioned the bad influences left behind by Lin Biao and the "gang of four" and the lack of social stability and unity, while 68 said that they were unable to answer the question and did not give any specific answers.

Question 9 was: Are you willing to work at this factory? And why? Some 240 replied in the affirmative, 43 were satisfied with their work assignments, and 122 replied in the negative. Among the latter group, 76 were dissatisfied with long commuting hours and traffic inconvenience, 12 were dissatisfied with the leadership and the latter's inability to adjust to changing conditions, 7 considered their work environment too polluted, and 6 were unable to adjust to working in three shifts.

Question 10 was: Do you wish to join the Communist Party? A total of 314 replied that they strongly desired party membership and were actively seeking this status, while 79 expressed a lack of interest or loss of interest. Some did not give a definite answer to this question.

We can clearly see from the survey that the quality of our young workers as a whole is fine. Their mental outlook is basically stable, and their overall development tendencies are for the good. The overwhelming majority of young workers are deeply fond of the party,

socialism, and the country. They demand progress and are concerned about politics, the collective life, and the productivity of the factory. Only a minority are lacking in ambitions or spritual good health or are pursuing the capitalistic way of life.

How do we monitor our activities based on the characteristics of the young workers?

The factory closely coordinates the changing work foci of the party. It holds fast to the goals of educating the majority of team members and young workers on the four basic principles and communist morality. The factory actively mobilizes team members and young people to acquire cultural knowledge and scientific technology, to make innovations, and to offer their youth for realizing the four modernizations. At the same time, the factory sponsors cultural activities for young workers in order to enrich their life during their leisure time.

In a meeting organized by the team committee of the factory to celebrate the "Deeds of the 1980's" and the pursuit of the five goods, an award was presented to team member Niu Linghua [3663 3781 5478], a young worker at the factory and a member of the Chinese Communist Youth League. She was praised for her altruistic behavior in twice donating blood and saving the life of a child at the risk of aggravating her own poor health. She received an honorary citation and was presented with a symbolic red flower.

Since the creation of the incentive program, the overwhelming majority of team members and young workers have been enthusiastically participating in the various activities organized by the teams. Up to this time, 957 team workers have received awards. A total of 1,467 awards have been granted. Based on statistics, by dint of hard work and devotion over the past 6 months, the team members and young workers of the factory have generated 12,000 yuan by recycling used iron and steel and metallic and other raw materials. Their efforts in repair and equipment renewal brought in a total income of 15,543 yuan. They introduced 54 technical programs and carried out into fruition 35 practical proposals.

After receiving the citation for rescuing the life of a child with the blood she donated, Comrade Niu Linghua successfully carried out two technological programs in the refining group and received two additional awards. Although she is only a high school graduate, she studied diligently, learned from the old workers, weathered many difficult problems, and finally resolved the problem of the corrosion of salt baths and flanges. In so doing, she has filled a gap in the production process and quaranteed the quality of products in her group.

While promoting their activities on "Deeds in the 1980's", the factory also pays attention to organizing activities which cater to the cultural life of the young workers. The team committee has sponsored contests in chess, go, and Chinese chess; two technology film shows; sports events and variety shows; and a spring tour to Xi Shan for more than 200 team cadres and workers who had received awards. In mid-July, the factory organized a summer camp at Fang Shan for team members and young workers who had received awards. The various grassroots branch committees have also organized activities such as gala shows, music festivals, film shows, operas, and various ball and chess games. Recently, with the strong support of the union, the factory sponsored the first calligraphy, art, and photography exhibition, which received a favorable response. The development of these activities has furthered enlivened the young workers, increased the attractiveness of the factory, and delighted the team members and young workers.

9471
CSO: 4005

PARTY AND STATE

LEGAL PROVISIONS FOR CHINESE CITIZENSHIP EXPLAINED

Beijing RENMIN RIBAO in Chinese 26 Sep 80 p 5

[Article by Gong Qiuxiang [7895 4428 4382], "The Principal Basis in Handling the Citizenship Question"]

[Text] Citizenship is the legal qualification of an individual to become a citizen of a state. It is a prerequisite to determining whether a citizen is entitled to enjoy rights and to be subject to the responsibilities of that state, and it is the legal basis for a state to afford diplomatic protection to its citizens residing abroad. The citizenship question is in principle a matter that falls within the realm of national sovereignty. Possession, acquisition, loss, and restoration of citizenship are regulated by domestic law. At present, most countries of the world have their own individual laws concerning nationality.

Today, the nationality laws prevailing in every country generally provide two principal rules for the acquisition of citizenship--i.e., citizenship acquired by birth or by naturalization. Citizenship by birth is also called original citizenship of a country. The principles adopted by each country to determine the citizenship of an individual by birth are not in conformity. Some of the countries adopt the rule of "law of blood" [jus sanguinis], whereby a child's citizenship is determined by his parents' nationality, regardless of his place of birth; some other countries adopt the rule of "law of the soil" [jus soli], which provides that any person born within a country's boundaries is a citizen of that country, regardless of the nationality of his parents; and still other countries adopt the principle of combining both "law of blood" and "law of the soil." The trend is for most countries to adopt both "law of blood" and "law of the soil" simultaneously.

In the past, our country has traditionally adopted the principle of "law of blood." Based on the experience of practice over the past years and the situation newly emerged, and in consideration of the trends developed in most countries regarding the handling of the citizenship question, the Nationality Law which our country has laid down at present adopts the principle of combining both "law of blood" and "law of the soil." Articles 4, 5, and 6 of the Nationality Law are concrete reflections of the principle mentioned above.

Article 7 of the "Nationality Law" of our country stipulates: "A foreign national or a stateless individual who is willing to obey the Constitution and laws of China, and who meets one of the conditions below, may apply for Chinese citizenship:

1. He is an immediate relative of a Chinese; 2. He is a resident of China; or 3. He has other justifiable reasons." In general, the nationality laws of every country take the marriage of one of its citizens to a citizen of a foreign nation as an important case for acquisition of citizenship, and a specific stipulation has been provided for it. According to the practice of our country, foreign citizens are not eligible automatically to become citizens of China simply because they are married to Chinese citizens. However, according to our Nationality Law, in such cases they will become "immediate relatives of Chinese nationals," and thereby they are qualified to apply for Chinese citizenship.

Another fundamental principle followed by our Nationality Law is nonrecognition of dual citizenship. This is a consistent position of our government and a very important experience in practice. As early as the 1950's, Premier Zhou Enlai and other leaders stated their position on this principle. This principle has also been reaffirmed many times in communiques on occasions of the establishment of diplomatic relations with countries and in other documents. This principle has provided a strong basis for properly resolving the problem of dual nationality, which is a legacy of history, with countries concerned, and for avoiding the recurrence of the problem of dual nationality. At present, the issue of resolving and preventing dual nationality is still relatively outstanding. For this, the nationality law of the People's Republic of China has, on the basis of past experience, further provided the following specific stipulations: 1. A Chinese citizen residing abroad who voluntarily becomes naturalized in another country will automatically lose his Chinese citizenship. 2. An individual whose parents, or one of whose parents, is a Chinese citizen, and who resides in a foreign country where he is born with citizenship of that country by birth [jus soli], does not have Chinese nationality. 3. One who has gotten approval to take or to restore Chinese citizenship is not allowed to retain his citizenship in a foreign country. Over the past years, we have discovered through practice that some Chinese citizens residing on Chinese territory have secured passports from foreign countries, and have asked for treatment equal to that accorded to foreign nationals, prior to their renouncing their Chinese citizenship. The situation has caused confusion in the handling of the citizenship question. As a result, the "Nationality Law of the People's Republic of China" explicitly stipulates: An individual has "Chinese citizenship if one of his parents is a Chinese citizen and he himself was born in China. Dual nationality of a Chinese citizen is not recognized. Should a Chinese citizen wish to become a foreign national, he has to file a petition to renounce his Chinese citizenship, and the petition must be approved. Such a stipulation helped us abolish dual nationality.

According to the fundamental spirit of the Nationality Law and the persistent policies of our government, we support and encourage overseas Chinese residing abroad to voluntarily acquire citizenship of their country of residence. We hope that they will enjoy the same rights and be subject to the same responsibilities which the country of residence has accorded to their own nationals, and that they may make a contribution to the prosperity and progress of the country of residence. Overseas Chinese who already are citizens of their country of residence automatically lose their Chinese citizenship. Meanwhile, in order to respect the desires of those overseas Chinese who do not become citizens of a foreign country, we do not prefer to force them to change their nationality. As for those overseas Chinese who voluntarily desire to retain their Chinese citizenship, we encourage them to obey the laws and regulations of the government of their country of

residence, to respect local customs and practices, and to get along well with local people, in order to make great efforts to promote friendship between China and their country of residence. Of course, the government of the country of residence should also be requested to protect their legitimate rights and interests. The Government of China has the responsibility to afford diplomatic protection of the legitimate rights and interests of overseas Chinese. Such provision is in conformity with the basic interests of the masses of overseas Chinese, is helpful in resolving the problem of dual nationality among overseas Chinese, which is a legacy of history, and is useful in improving and promoting friendly relations between our country and the countries concerned.

Provisions also are provided in the Nationality Law of our country to reduce and abolish statelessness. A stateless individual is a person who is not a citizen of any country. There are some people in our country who are stateless or are of unknown nationality, but they are only a handful. In order to reduce and abolish this phenomenon, so that they may enjoy the same rights and be subject to the same responsibilities as other Chinese citizens, Article 6 of the "Nationality Law" stipulates: "An individual whose parents are stateless or are of undetermined nationality but who reside in China, and he himself is born in China, has Chinese citizenship." It also provides that a stateless person may apply for Chinese citizenship if he meets certain stipulated conditions.

The promulgation of the "Nationality Law of the People's Republic of China" enables us hereafter to have a strong legal basis in carrying on negotiations with foreign countries for the purpose of handling the citizenship question. However, in view of the complexity of the citizenship question itself, which involves relations between one country and another, it is certain that, in the process of handling the citizenship question in a practical manner in the future, a variety of problems will be unavoidable. This situation requires us to do our job by continuously summing up experiences.

9560
CSO: 4005

PARTY AND STATE

NEWSPAPER CORRESPONDENTS HAVE PROPER RIGHT TO FILE NEWS REPORTS

Jinan DAZHONG RIBAO in Chinese 27 Sep 80 p 1

[Article: "Guarantee the Proper Right of Newspaper Correspondents to File News Reports"]

[Text] In XINWEN ZHANXIAN [NEWS FRONT] No 9, just published, there is an article entitled, "Such a Thing Happened." The article states that after Comrade Song Maopang [1345 5399 1690], a cadre of the Production Division of the Shanxi Provincial Agricultural Committee, had given reporters a briefing on the fact that agricultural cadres in the province had studied an editoral of RENMIN RIBAO about moving water from west to east in Xiyang, he was dogged by an invertigation without any reason by some leading personnel of the provincial agricultural committee, with the result that Comrade Song suffered cerebral angiospasm caused by high blood pressure.

The fact is that, after RENMIN RIBAO on 15 June of this year published an editorial, "Never Do Such a Stupid Thing as 'Move Water from West to East' Again," and then a report, "Work of 'Moving Water from West to East' in Xiyang Suspended," a majority of agricultural cadres and workers in Shanxi Province studied and discussed them in earnest. They all said that the editorial had grasped the vital point about paternalistic rule and had spoken out on what the masses of people had intended to say for many years but dared not. In order that everyone will learn a lesson from this "stupid thing," Comrade Song Maopang, who was responsible for collecting information on the discussion and writing briefings, gave the first briefing to reporters of XINHUA's branch office and SHANXI RIBAO. He was following the suggestion of Comrade Zhao Lizhi [6392 0500 0037], director of the Provincial Agricultural Committee. On the basis of the briefing, a news article written by SHANXI RIBAO, and screened and signed by relevant leading personnel of the Provincial Party Committee, was published as the first article on the front page of the newspaper on 2 July. It was beyond all expectation that such a good thing should have offended certain persons on the Provincial Agricultural Committee. On the morning of the same day, after learning the news from a broadcast, a deputy director of the Provincial Agricultural Committee wrote a note to a deputy chief of the Production Division to the effect that this article was a violation of the guiding ideology of the party organization of the agricultural committee, and that it had been [written] "for the purpose of venting one's spleen." The deputy chief called in Comrade Song Maopang twice for talks, once in the morning and once that same afternoon. He persistently asked: "Who leaked the briefing? With whose

permission?" He said that this was "an attempt to get the news first," "furtile help for the provincial party committee," "stirring up trouble," "forcing the leading personnel of the Provincial Party Committee to sign," etc., thus applying pressure to Comrade Song Maopang. Comrade Song could not be convinced by the investigation and went to see the deputy chief to voice his opinion the next day. He also requested verification of the contents of the talk of the previous day. The deputy chief erupted into a furious rage and said that Song Maopang had intended to stir up an incident in the Provincial Agricultural Committee.

The article also told how certain leading personnel on the Provincial Agricultural Committee had purposely caused difficulties without any reason for reporters of SHANXI RIBAO because they were doing some related reporting on the matter and had also made a review of the deputy director and deputy chief of the Provincial Agricultural Committee. But it did not make clear the condition of the problem.

At the same time that XINWEN ZHANXIAN published this article, it also published a brief comment entitled, "The Proper Rights of Newspaper Correspondents Are Not To Be Infringed Upon." It pointed out: "Party newspaper correspondents were doggedly investigated because they had filed news reports through proper channels in order to uphold the party's and people's benefits. It is really surprising that this should have happened now, when the Party Central Committee has called over and over again for restoration of the party's fine tradition, and at a time when guiding principles for political life within the party are being carried out thoroughly, and especially that this should have happened in the leading organization at the provincial level and among the responsible cadres themselves! This indicates that certain comrades, even while they are talking about expanding democracy, are suppressing it by their action; while talking about upholding the prestige of the party and party organizations, they are weakening the party's leadership and lowering the prestige of the party by their actions. This is a matter worthy of the people's attention." The comment also pointed out: The fact that cadres and the masses file news reports to party newspapers is one of the important items of democracy within the party and of socialist democracy. It is one of the important rights protected by the party constitution and the laws of the nation, and it is absolutely not to be infringed upon. In this respect, it is the glorious responsibility of our party's news units to give the working personnel and the majority of news correspondents of party newspapers our constant, resolute, and forceful support.

9503
CSO: 4005

PARTY AND STATE

KANG SHENG DEBUNKED AS SELF-SERVING MOUNTEBANK

Beijing BEIJING RIBAO in Chinese 8 Aug 80 p 3

[Article by Wang Tzukai [739 1311 1956]: "On Kang Sheng's 'The Highest and Ultimate Criterion'"]

[Text] On the question of the standard of truth, the trumpeter of "Liang Ge Fan Shi" [Chairman Mao's collected writings] the touchstone for the standard of truth. After a 2 year debate on this erroneous way of thinking people are beginning to understand the absurdity and danger of that idea. However, there are still those who have yet to realize that the perpetrator of such an outrageous idea is none other than the eminent "master theoretician" Kang Sheng himself.

It was on 4 January 1960 that Kang Sheng first said, "Make the Chairman's thoughts the highest and ultimate criterion," adding: "This in itself is correct, but it is not good to bruit it about." To say that it is "correct" to "make the Chairman's thoughts the highest and ultimate criterion" is to say that Mao Zedong Thought should be made the touchstone for the standard of truth, that it is not only "the highest criterion" but also "the ultimate criterion," and that by inference it is the only criterion. When Kang Sheng said that "it is not good to bruit it about," he was merely resorting to duplicity. What he really meant was that his absurd statement should be treated as an "important order" and that it should be promptly spread around. As expected, his "order" was soon relayed down to the lowest echelons of party members and party cadres at the Central Communist Party School, who forthwith made it a topic for discussion. Thereupon, Kang Sheng, who had said that "it should not be bruited about," not only offered no objection, but made no attempt to head it off. Not only that, but he himself made assiduous efforts to sell the idea by spreading it far and wide. It was he himself who ordered students at the Central Communist Party School to examine their attitude toward Mao Zedong Thought from the "high point" that it "represents the highest and ultimate criterion," and to "study Mao's writings first before studying the writings of Marx and Lenin." He even made it known that in studying the writings of Marx and Lenin, they should "proceed from Mao Zedong Thought." Those who expressed the slightest doubt or opposition were branded seditious or traitorous persons. For instance, when some comrades raised the question--"How can we proceed from Mao Zedong Thought when "Das Kapital" appeared before Mao Zedong Thought?"--they were castigated as being "opposed to Mao Zedong Thought." Since then, such absurd ideas as "Mao Zedong Thought represents the acme of Marxism-Leninism," "the highest truth," "carry out what is understood and also carry out

what is not understood," "every sentence represents the truth, and instructions must be carried out to the letter," and everything "must be done according to a set policy," etc., have come tumbling down in rapid succession. It is clear, therefore, that it was Kang Sheng's theory of "the highest and ultimate criterion" which gave rise to all these absurdities.

By espousing "the highest and ultimate criterion" theory, Kang Sheng has shown what kind of "master theoretician" he was. A rudimentary knowledge of Marxism tells us that it is practice and practice alone that is the criterion for arriving at the truth. Apart from that, as Comrade Mao himself pointed out, "There is no other way of arriving at the truth."

Why, then, did Kang Sheng, the so-called "authority on Marxism," have the temerity to cook up the absurd theory of "the highest and ultimate criterion," in contravention of the basic position of Marxism? Why did such absurdities cast a bewitching spell on such a large number of cadres, so much so that even after the "gang of four" had been smashed, there were still those who continued to espouse the "Liang Ge Fan Shi" theory? The main reason is that Kang Sheng, taking advantage of the infinite confidence and deep affection engendered in the Chinese people by Comrade Mao Zedong and his thought during the extended period of Mao Zedong Thought, and their value as guideposts, with the principle for setting up a criterion for determining the truth.

By making Mao Zedong Thought "the highest and ultimate criterion," Kang Sheng not only violated the basic position of Marxism, but he was also guilty of flagrantly distorting and trampling upon Mao Zedong Thought.

First of all, advocating an absurd theory of this kind was tantamount to twisting Mao Zedong Thought in such a way as to turn it into a rigid body of doctrines completely divorced from practice and from what is proven by practice. At first glance, by making Mao Zedong Thought the "criterion" for arriving at the truth, Kang Sheng appeared to be giving Mao Zedong Thought a "high" rating. Actually, however, he did great damage to the tremendous guiding force of Mao Zedong Thought by turning upside-down the relationship between Mao Zedong Thought and what practice tells us. He had, in short, turned Mao Zedong Thought--which originally was based on practice, which exhorted a resort to practice, and which advocated continued supplementation, rectification, enrichment, and development--into something which is unrelated to practice and which takes precedence over practice. Thus, Mao Zedong Thought would cease to be a living body of theories developed in step with developments evolving from practice. It would be twisted into a body of rigid doctrines which has no relationship to practice and which takes precedence over practice. Mao Zedong Thought would cease to relate to reality and practice, once it ceased to be developed through practice by supplementation, rectification, and enrichment. On the contrary, reality and practice would be pared and shaped to fit Mao Zedong Thought.

Secondly, this "highest and ultimate criterion" theory, much like the "acme" theory espoused by Lin Biao, twisted Mao Zedong Thought into the category of "ultimate truth." According to Marxism, since the objective world continues to evolve and practice never ceases to reveal something new, human understanding must of necessity continue to grow, instead of remaining forever where it is. There is no place for the so-called "ultimate nature" idea in the world. True enough, no

contemporary thinker can measure up to the stature and profundity of such spiritual guides of the proletarian revolution as Marx, Engels, Lenin, Stalin, and Mao Zedong. However, due to the limitations imposed by historical factors, their understanding cannot be said to have the attributes of the "ultimate." Marxism-Leninism has not exhausted the truth: it has only pointed the way to seek the truth.

Despite the fact that the idea of the "ultimate" has no validity, all philosophers and thinkers who lived before the advent of Marxism, including the great master Hegel himself, who did so much to develop the idea of dialectics on the basis of idealism, considered their bodies of thought "the ultimate truth." As a group, and without exception, they all fell under the spell of metaphysicism and turned their theories into absurdities. Appraised as the legatees of human culture, Marx and Engels established dialectical materialism, thus bringing to fruition a noble revolution in the history of human knowledge and debunking the entire body of "ultimate truths" as worthless. Marx and Engels, in repeatedly and mercilessly flaying the perpetrators of "the ultimate truth," said that "all the creators of the eternal truth in the past were more or less stupid asses or mountebanks." Nevertheless, Kang Sheng, playing deaf and dumb, arbitrarily adjudged Mao Zedong Thought as "the highest and ultimate criterion." By so doing, he denigrated Mao Zedong Thought to the level of the "ultimate truths" denounced and excoriated by Marx and Engels. In short, he put Mao Zedong Thought in the same class as the outmoded theories and effectively divested them of any revolutionary meaning.

Furthermore, by spewing forth "the highest and ultimate criterion" theory, Kang Sheng dismembered Mao Zedong Thought into fragments of words and phrases, making it a protective shield behind which to peddle his own wares. Kang Sheng never tired of calling Mao Zedong Thought the "highest and ultimate criterion," and yet, what does Mao Zedong Thought mean? To Kang Sheng, there was a great deal of flexibility in interpretation, and he felt free to interpret it in a way that best suited his purpose. What he did was to hack at and dismember the body of Mao Zedong's integrated and scientific thought and to reduce it to unrelated words and phrases. By claiming that Mao Zedong Thought is "the highest and ultimate criterion," he made Mao Zedong's every sentence, every phrase, and every word "the highest and ultimate criterion." Thus he was able to make use of every error or unproven theory of Mao Zedong in pursuing his own nefarious ends. At the same time, taking advantage of his status as an "authority," he felt free to interpret Comrade Mao's every sentence, every phrase, and every word in a way best suited to his own political purposes, and thus to make every sentence, every phrase, and every word of his own "the highest and ultimate criterion." Consequently, his every utterance was taken as a yardstick. If Kang Sheng gave the nod to somebody, that person would go to heaven no matter what a low and dastardly character he might be; but if he turned thumbs down on somebody who was a time-tested proletarian revolutionary, that person would be consigned to purgatory. He made it a practice to represent his own utterances as being those of Comrade Mao Zedong, pulling the wool over the eyes of the people wherever he went, so much so that it became a matter of habit.

Finally, by making Mao Zedong Thought "the highest and ultimate criterion," Kang Sheng actually dealt Comrade Mao the supreme insult. By doing that, he was in effect calling Comrade Mao Zedong a "genius" who knew everything the day he was born, an incomparable "deity" set apart from the human race, a "peculiar person"

vested with infallibility. It was Kang Sheng's theory of "the highest and ultimate criterion" that gave rise to the modern superstitions and theories created by the likes of Lin Biao and the "gang of four."

From a theoretical point of view, the theory of "the highest and ultimate criterion" promoted by Kang Sheng is patently absurd, politically reactionary, and motivated by extreme malice. At the time he was engaged in a struggle with the Trotskyites, Comrade Stalin made a most profound statement. "It has long been a practice," he said, "for the opposition party to sing the praises of Comrade Lenin as the genius of geniuses. The probability is that such laudatory encomiums do not come from the heart and that they merely serve as a cloak for a plot of strategic nature. By calling Comrade Lenin a genius, they are using this as a shield to dissociate themselves from their acts." By vesting Comrade Mao Zedong's theories with absolute authority and by propagating the idea of the so-called "highest and ultimate criterion," Kang Sheng was resorting to the same strategic device. If there was any difference between Kang Sheng and the Trotskyites, it was that, in resorting to such devious strategic devices, he was infinitely more adept, more crafty, and more deceitful than Trotsky. How did Kang Sheng go about playing such tricks? First, by shouting "the highest and ultimate criterion" to the sky, he was posing as a "booster" and a "staunch follower" of Mao Zedong in order to boost his own political capital. Second, by mouthing such theories, he was seeking to distort the substance of the thoughts of Comrade Mao Zedong, to divest them of their revolutionary spirit, and to peddle his own wares as "Mao Zedong Thought." Third, by bandying such theories about, he was using them as a weapon to eliminate and liquidate a large number of verteran cadres and comrades who opposed him, accusing them of being "opposed to Mao Zedong Thought."

By resorting to such a strategem, Kang Sheng was not without some success for a period of time. Didn't he, by "inventing" and "promoting" the so-called "the highest and ultimate criterion" theory, and later, in connivance with Lin Biao and the "gang of four," by promoting such absurd dictums as the "acme," Da Shu Te Shu" [raise high Chairman Mao's authority], "the absolute authority," "each and every word is the truth," and "instructions must be followed to the letter," earn himself a huge share of political capital and propel himself up the ladder of the party? Wasn't he, even after his death, the recipient of the triple laurel as an "authority on the theories of Marxism," a "proletarian revolutionary," and a "glorious warrior against revisionism?" In the hubbub created by such theories, didn't he succeed in liquidating a large contingent of leadership cadres by accusing them of being "opposed to Mao Zedong Thought?" Didn't he, in the midst of the tumult, create a deification campaign and cause a body of modern superstitions to spread like an epidemic across the face of the nation, the calamitous effects of which have yet to be completely eradicated? For this reason, in order to delve into the absurd theories espoused by Lin Biao and the "gang of four" and to eradicate their poisonous effects, it is absolutely necessary to get at the source of the evil and to rectify their "mentor" and "master theoretician," Kang Sheng, who concocted the theory of "the highest and ultimate criterion."

9621
CSO: 4005

PARTY AND STATE

HUMAN RESOURCES SHOULD BE USED WHERE MOST NEEDED

Beijing BEIJING RIBAO in Chinese 8 Aug 80 p 3

[Article by Chen Ziande [7115 6343 1795]: "Rescue the Ox From the Bottom of the Well"]

[Text] The conundrum "When a grown ox falls into a well, all his strength is to no avail" has been going the rounds for ages. As to whether it is possible for an enormous ox to fall into a well, the probability is that nobody has yet given it serious thought.

In the goings-on of society, however, it is a common occurrence for a "grown ox" to fall into a "well." We don't have to look too far back. According to a recent newspaper report, a certain factory had in its employ over 1,000 intellectuals. From a technical standpoint, it might be said to be adequately staffed. However, because there were not enough jobs of a technical nature to go around, at least 80 of the middle and trade school graduates in its employ since 1958 were still assigned to work in the carbarn, and at a time when there was an acute need for technical workers in other units in the vicinity. Although these factories were located in the same area or in the suburbs, it was almost impossible to make the necessary adjustments to remedy the situation, which may be summed up by the saying, "The large factories will not let go of their competent workers, while the smaller factories cry out in vain for capable personnel." Some technical workers vented their feelings by penning the following poem: "All that we have learned over the years has gone to waste. All our aspiriations have gone up in smoke. There's no lack of ambition, but what can we do? What else but to let our learning rot in our bowels?" As a matter of fact, this state of affairs prevails not only in the factories, but also in the scientific and technical, cultural and educational, as well as financial and commercial fields. According to a survey conducted by the concerned parties, there are still many among the 1.2 million scientific and technical workers who have not been assigned jobs commensurate with their talents and who are still "floundering" in the "well." At a time when the four modernizations are in such dire need of the services of a large herd of "vigorous oxen," isn't if a crying shame that there are still so many "oxen" who have no way of putting their assets to proper use? Hence, we must sound a clarion call for the "ox" to be rescued from the bottom of the "well."

Some leadership cadres tend to belittle the situation by saying, "Why make such a fuss? Why turn a frog into an ox?" It may be true, of course, that not all those who have been cast into the "well" are oxen, but it is patently wrong to regard a

live "ox" as a "frog." An illustration is not difficult to find. There was a technical worker at a certain large lathe factory who had difficulty being placed in a suitable job and who, in the eyes of those in leadership positions, was rated no higher than a "frog." Two years ago he was, by chance, taken on by another unit on a loan basis. First he was assigned to a herbal factory to assist in introducing technical renovations. It did not take him long to succeed in establishing an automatic assembly line. When he was later assigned to a vegetable-canning factory, he again succeeded in setting up an automatic assembly line for the production of vinegar. This comrade has now been appointed an engineer. This is not an isolated incidence. If we look at it another way, even if this worker was in fact a "frog," he should not have been put at the bottom of the well. True enough, a frog may not be able to pull a plough or a wagon, but it can still be used to catch insects and mosquitoes instead of being left to stagnate at the bottom of the well. Why hasn't this very simple truth been given some serious thought? Those who justify their action in not releasing their able workers tend to ask, "How do we go about diverting one's interest?" By "interest" is meant presumably the consuming passion on the part of the specialist concerned. It is true that, in the past, a large number of comrades who had to give up their special jobs with which they were familiar in order to take on new jobs to meet the needs of the revolution have acquitted themselves creditably. However, our central mission today is the implementation of the four modernizations, which need large numbers of capable workers. Why, then, must we insist that they forsake their special field with which they are familiar and divert their interest to another area? We too, can see that there are many who do not have jobs best suited to their talents and who are not averse to diverting their interest to another field. However, due to the limitations of objective circumstances, many of them merely bide their time without accomplishing anything. There are also those whose hair has turned gray while learning their new jobs. This example of stupidity is like shortening the neck of the crane and stretching that of the owl. However, under the present existing conditions and the guise of "diverting one's interest," it has become commonplace to force Li Kui [2621 6652] to learn embroidery and sewing, to "mobilize" Lin Daiyu [2651 7818 3768] to shoulder a rifle or wield a club, to order Chen Jingrun [7115 2529 3387] to show his skills on the playing field and to "lead" Mu Tiezhu [4476 6993 2691] to scale the heights of mathematics. Such anomalies are so commonplace that it would be laughable if it were not so tragic. The end result is that many talented persons have neglected what they had learned as they get along in years. It is more correct to say that we misuse our talents rather than to say that we cherish our talents. Why don't some of our comrades try to put people in the jobs best suited to their aptitudes, instead of trying to divert their interest?

"This unit needs that person" has become a high-sounding stock answer to all queries. Armed with this signboard, they would sit on the lid of the well, resolutely refusing to let the "ox" out. Two points need to be clarified. First, is it a real need or not? Facts have borne out that the latter is usually the case with many units. Secondly, even if the need is real, the "greater need" of the nation should take precedence over the "smaller need" of a particular unit. The fact that certain units hold on to their people so tenaciously on the basis of "need" may be explained by certain encrusted feudalistic conceptions. As a matter of fact, both the "well" and the "ox" in the well are the property of the people or are collectively owned. However, in the minds of certain comrades on whom feudalistic ideas have taken a firm hold, the "well" seems to have become their private domain,

and so much so that it is easier to soar to the heavens than to retrieve the "ox" from the "well." It can be seen, therefore, that in order to save the "ox" it is first necessary to remove the "well cover" of feudalistic conceptions.

The adequate unearthing and development of human resources constitute an urgent mission in the implementation of the four modernizations. At the present time, in order to remedy the enormous waste of talent, it is of crucial importance to bring about reforms in the system and the organization of managerial cadres, so that the leadership may assign proper jobs to the proper persons. As for the "ox" in the "well," it is still possible to take the initiative and to appeal to higher authorities in a positive manner. There is an old saying, "Inequities cry out for redress." If the fine steed under the yoke of the salt wagon had not reared its head and made itself heard, the probability is that it would not have been discovered by Bo Luo [0130 2867]. In my opinion, when all other methods have failed, this may well be the one that will lead to a solution of the problem.

9621
CSO: 4005

'BA YI RADIO' RAPS DENG XIAOPING FOR REPRESSING CRITICISM OF BAOSHAN

OW301213 (Clandestine) Ba Yi Radio in Mandarin to China 1400 GMT 29 Oct 80

[Text] We cannot help objecting to Vice Chairman Deng's severe censure of Comrade He Changgong simply for stating his personal views on the Baoshan steel question. First, we hold that Comrade He Changgong, deputy commandant of the PLA Military Academy, as the deputy of our army to the NPC session, has the right to freely express his views and opinions to state affairs. Second, we must point out that what Comrade He Changgong said voiced the aspirations of our party, our army and the broad masses of our people.

Although opinions presented by Comrade He Changgong and others proposing to put off construction of the Baoshan project because the project is a bottomless pit that cannot be filled no matter how much more money we invest are sharp, they are sincere and practical. [Words indistinct] why should Vice Chairman Deng censure such opinions? Why should discussion on the opinions of He Changgong and others be prohibited? How can we say that Comrade He's opinions are absurd? Why should he be reprimanded for paying more attention to economic work than to military training?

Comrade Deng Xiaoping's criticisms cannot help but remind us of someone who in past years flauted that he had absolute authority and acted imperiously according to his own free will. We are all aware of the castrophe he brought to our nation and to our people. [Words indistinct] To learn from past mistakes to avoid future ones, we must conscientiously discuss all complicated and important political and economic issues put forward by the deputies as well as pay attention to listening to the opinions of all comrades, including the deputies of the army.

It is beneficial for us now to recall the struggles of the army deputies in resolutely opposing the erroneous economic line that brought untold misery to the nation and people. More than 20 years ago, in 1959, Marshal Peng Dehua boldly presented his views, pointed out the serious mistakes in economic construction [words indistinct] and proposed to rectify the mistakes and avoid making the same mistakes at the Lusan conference. [Words indistinct] At that time, army deputies like Huang Kecheng [words indistinct] and others also [?supported] Peng. If their opinions had been listened to, the mistake of the great leap forward, which caused heavy losses to the state and unnecessary disasters to the people, could have been averted. Regrettably, those comrades who dared to remonstrate suffered from ruthless attacks and cruel persecution in the years of patriarchal and fascist rule.

Now history has repeated itself, for although the people are allowed to express their views and newspapers carry the readers' letters, excerpts of the criticisms and proposals of the NPC and CPPCC deputies, there are still people who do not respect others' opinions because they are in high positions and possess great power. They even slanderously attack comrades like Deputy Commandant He Changgong who dare to express their views.

CSO: 4005

BRIEFS

TRIAL TO BEGIN 2 NOV--According to travelers back from Beijing, a rumor has been going in Beijing Municipality in recent days that the trial of the "gang of four" including Jiang Qing will start at zero hour on the morning of 2 November. [Text] [HK290642 Hong Kong HSIN WAN PAO in Chinese 28 Oct 80 p 4]

LIAONING DEMOCRATIC PARTIES' MEETING--The Liaoning Provincial Revolutionary Committee of the Kuomintang, the Provincial Democratic League, the Provincial Democratic National Construction Association, the Provincial Association for Promoting Democracy and the Shenyang Municipal Branch of the Jiusan Society recently held their standing committee meetings or plenary meetings to study ways to implement the guidelines of the third sessions of the Fifth NPC and the Fifth National CPPCC Committee. The participants were inspired by the independent political and organizational rights provided by the constitution. [Shenyang Liaoning Provincial Service in Mandarin 1100 GMT 29 Oct 80 SK]

LIAONING VISITING DELEGATION--After completing its activities in Xinjiang Autonomous region, the visiting delegation of Liaoning Province for studying the nationality work left Urumqi Municipality by plane on 26 October. The delegation went to Ili, Shihezi, Turpan, Urumqi and other places in the past 15 days, and discussed agricultural production, livestock breeding, and nationality work with people of various nationalities. On the eve of their departure, Vice Chairman A-mu-dong Ni-ya-zi of the Xinjiang Regional People's Government and personnel from other departments concerned paid a visit to all delegation members. [Urumqi Xinjiang Regional Service in Mandarin 1300 GMT 26 Oct 80 OW]

XINJIANG THEATRICAL DELEGATION--The Xinjiang delegation which took part in the National Minority Theatrical Festival in Beijing returned to Urumqi on 26 October. During the festival members of the delegation were cordially received by Comrade Hua Guofeng and other central leading comrades. The organizers of the festival presented the delegation with 14 tape recorders as prizes. Members of the delegation also received citations and souvenirs. [Urumqi Zinjiang Regional Service in Mandarin 1300 GMT 27 Oct 80]

XINJIANG WORKERS CONGRESSES--According to the Xinjiang Autonomous Regional Trade Union Council, 113 industrial enterprises in Xinjiang have restored or established the workers' congress system. Long-standing problems concerning enterprise management and improvement of workers' livelihood have been solved at the congresses. [Urumqi Xinjiang Regional Service in Mandarin 1300 GMT 28 Oct 80 OW]

CSO: 4005

MILITARY AND PUBLIC SECURITY

'BA YI RADIO' SAYS U.S. GIVES PRC MILITARY SECRETS TO TAIWAN

OW051205 (Clandestine) Ba Yi Radio in Mandarin to China 1400 GMT 4 Nov 80

[Text] Intelligence reports received from Taiwan lately have greatly disturbed our army, commanders and fighters alike. They came as a violent shock to our military security personnel. How can Taiwan have access to such a great number of our army's highly classified documents as indicated by the reports? An investigation by agencies concerned revealed that our army's secrets known to the Kuomintang Party in Taiwan are identical to the military information collected in our country by the military delegations from the United States.

It is known to all that Vice Chairman Deng Xiaoping issued an instruction early this year after concluding a series of talks with U.S. Defense Secretary Harold Brown. In order to develop Sino-American military cooperation, his instruction says in effect, we do not have to keep our secrets inaccessible from our American ally even if we do have to pay the total cost. Since Comrade Deng Xiaoping said this, the gate to our army's important secrets has opened to the United States.

A U.S. military technology delegation led by Dr William J. Perry, undersecretary of defense, visited our country in September. Vice Chairman Deng Xiaoping also took part in the talks with the visiting delegation and authorized them to tour our military-industrial centers. Thus, these Americans had every single detail of our [words indistinct] medium-range guided-missile proving grounds. They also visited our Shenyang Aircraft Manufacturing Plant, Xian Air Force plane engine factory, and the Shanghai Aeronautic and Space Flight Equipment Manufacturing Plant. Each visit lasted several hours. Moreover, the delegation even heard briefings at these military-industrial installations on our new technology, equipment production plans and trial production of a number of new weapons.

The U.S. military technology delegation was given a complete set of reference materials and blueprints of a new type of supersonic intercepter at the Shenyang Aircraft Manufacturing Plant. They were briefed on the instruments and equipment made in Shanghai for our manmade satellites, guided missiles, fighter planes, naval vessels and submarines and personally inspected these items displayed for them during their visit. Occasions like this disclosure of our military secrets were numerous.

People cannot help but ask why Vice Chairman Deng Xiaoping authorized the Americans access to our army's secrets? Was it, perhaps, a necessary move toward the establishment of mutual trust between China and the United States so that the American

leaders would authorize sales of their most sophisticated arms, military equipment and technology to our country as they would to their reliable, close friends?

But many developments lately indicate that Vice Chairman Deng Xiaoping's wishful thinking has turned out to be a pipedream. The United States still has refused to sell its new weapons and military technology or equipment to China. Our obsolete military hardware items still remain out of date. At the same time, however, the United States has shipped to Taiwan large quantities of its most up-to-date armaments, equipment and new military technology. Still worse, the Americans have transferred to the Kuomintang the important secret military information they collected in our country. This is an open secret known to all.

Vice Chairman Deng Xiaoping has obstinately pushed the policy of carrying out Sino-American military cooperation at all costs in order to usher in so called "broad vistas" for our army. He has been doing his utmost in peddling friendship with the United States, bringing only bad consequences to our country, consciously or unconsciously, Deng Xiaoping is pursuing a line that betrays the interests of our country, our army and the people of all the nationalities throughout China.

CSO: 4005

MILITARY AND PUBLIC SECURITY

'RADIO BA YI' CRITICIZES 'UNJUST' PURGES OF PLA CADRES

OW280515 (Clandestine) Ba Yi Radio in Mandarin to China 1400 GMT 27 Oct 80

[Text] Most members of leading bodies of the whole army, including the defense ministry, headquarters, arms of services and military regions and districts are currently old cadres. Very few are middle-aged or young cadres who, because of the limitations of objective conditions in the past, have a rather low cultural level and poor scientific and technical knowledge. This has naturally affected the needs of army building and war preparedness. Therefore, to speed up the pace of promoting middle-aged and young cadres, so that army leading posts will be filled by younger cadres, is indeed the central issue in army building at present.

However, one should not attack or purge in disguised form the older generation of army cadres under the pretext of bringing a younger generation of cadres into the army. Since the downfall of the gang of four, there have been three major purges against army cadres. It has been proved through investigation that 68 percent of those (?purged) are innocent and only (?40) percent of those purged are partially responsible for certain cases. Before the problems involving these comrades are settled, new unjust purges are under way.

Vice Chairman Deng recently stressed that those cadres who were promoted during the cultural revolution should come under careful examination, those who gained their prominence by relying on the rebels or during the "three-support, two-military" campaign cannot return to leading posts, and those who have already been given promotions should be dismissed without delay. Comrade Zhao Ziyang also said that those who do not harbor bitter hatred toward Lin Biao and the gang of four cannot assume important leading posts, not even leading posts in general. At an organizational work conference of the Party Central Committee, Comrade Hu Yaobang said that those who gained their prominence by attacking people, or who ruthlessly attacked people during the cultural revolution must be relieved from their posts without delay. All these remarks have created grave confusion in the army's work on cadres. Cadres departments in many military organizations and PLA units, out of fear that they may once again be charged with providing shelter for [word indistinct] criminals, have (?urged) those army cadres who took part in the "three-support, two-military" campaign to retire, transferred them to civilian jobs, dismissed or even purged them.

What's worse is that some organizations directly under the PLA air force and navy, the Shenyang PLA units and the Beijing PLA units, have, without the approval of the

Party Central Committee's military commission, prepared a public trial of the so-called remnants of the Lin Biao-gang of four clique even before the start of the public trial of the clique. Small wonder, many cadres are worried by the public trial of the Lin Biao-gang of four clique and are overtly and covertly boycotting the trial. All this cannot but undermine stability and unity within the army and adversely affect army building.

It should be pointed out that certain principal leaders of the Party Central Committee regard the army's participation in the past "three-support, two-military" campaign as a grave crime. They have taken to heart the fact that, while they were persecuted by Jiang Qing and Kang Sheng during the cultural revolution, the armymen were basically free from persecution because of Lin Biao's protection. May we ask: Is it the army's fault that the attacks on army cadres were relatively less serious during the cultural revolution? Why is it necessary to purge army cadres time and again? Can these leaders of the Party Central Committee vent their anger by purging army cadres? The total number of army cadres purged in the past 3 years since the downfall of the gang of four is more than 10 times that purged in the 10 chaotic years. Is this a normal phenomenon?

It is a fact that many leading comrades in the Party Central Committee were persecuted by Mao Zedong, Kang Sheng and the gang of four during the cultural revolution. This is the reason why the scheduled public trial of the gang of four has been supported by the whole party and the people of the whole country. However, after one takes power, is he then justified to follow Kang Sheng and the gang of four in persecuting army cadres?

CSO: 4005

MILITARY AND PUBLIC SECURITY

'RADIO BA YI' CRITICIZES PERSECUTION OF PLA LEADERS

OW020343 (Clandestine) Ba Yi Radio in Mandarin to China 1400 GMT 1 Nov 80

[Text] It is very natural for the masses of commanders and fighters throughout the army to be concerned with the trial of the former leaders of our army. Over the past 50 years since the founding of our army in 1927, this is the first time that high-ranking leaders, chiefs of staff, and commanders of military districts and various services and arms of the Chinese People's Liberation Army have been brought to trial. Fighting south and north at the risk of their own lives, those senior officers of our army indeed devoted themselves completely to the revolutionary cause throughout several decades of fighting. It is very difficult to convince people that these PLA leaders were involved in so-called counterrevolutionary activities some 20 years after victory in revolution. Only a handful of persons in the whole army believe that these leaders of our army represent a counterrevolutionary clique. According to a document submitted to the military commission of the Party Central Committee in December 1979 by the PLA general political department, nearly 98 percent of cadres at and above the army level were not convinced by the charges imposed upon the PLA leaders by the gang of four in 1973 and 1974, as well as other accusations lodged against them at the pretrial that was held after the downfall of the gang of four; some 90 percent of cadres at the divisional level were not convinced; nearly 82 percent of cadres at regimental and battalion levels were not convinced; 68 percent of cadres at company and platoon levels were not convinced; and no more than 60 percent of the fighters in general were convinced.

In view of this situation, all these questions--whether or not the trial of former PLA leaders conforms to the principles of democracy and the legal system, whether or not individual responsibility can be determined in the spirit of seeking truth from facts, whether or not the accused are to be allowed to defend themselves, whether or not the groundless charges imposed upon the PLA leaders by the gang of four can be reversed in accordance with the resolution adopted by the party's third plenary session, and whether or not innocent victims can be rehabilitated--have indeed a direct bearing on the stability and unity within the army, the prestige of the Party Central Committee and the military commission of the Party Central Committee, as well as on the faith of the army's commanders and fighters in the principal leading personnel of the central authorities and the military commission of the Party Central Committee.

However, we must pay attention to the fact that the 16th session of the NPC Standing Committee has appointed Comrade Shi Jinqian, deputy director of the PLA General

Political Department, as deputy director of a special procuratorate, appointed Comrade Wu Xiuquan, deputy chief of general staff of the PLA, as vice president of a special court and concurrently chief judge of the second tribunal, and appointed Comrade Huang Yukun deputy chief judge of the second tribunal. They are responsible for prosecuting and trying the former PLA leaders who are involved in the case of Lin Biao. But this work has encountered a series of deliberate acts or interference. First of all, that principal responsible member of the CCP Central Committee and its military commission has insisted on handling the PLA's leading personnel (?on the same footing) as the gang of four and their company during the trial. Since the NPC Standing Committee has already appointed the personnel for both prosecution and trial, decisions should be made independently by those comrades. But, the fact is that Comrade Wu Xiuquan must report to Vice Chairman Deng on progress in handling the case almost daily and request his supreme instructions. Therefore, the entire case is actually being handled on the basis of individual decisions rather than the legal system.

A correct attitude should be maintained toward Huang Yongsheng, who has denied his original confession. Facts show that many charges against him were fabricated by Kang Sheng and the gang of four, and that his case is the outcome of [words indistinct] by the special investigation group of the central organs. Since we must act in accordance with law, Huang Yongsheng should be allowed to defend himself. Furthermore, it is ridiculous to accuse a man like Huang Yongsheng for plotting an armed rebellion against Chairman Mao, because he has closely followed Chairman Mao for several decades since the (?rebellion in south Anhui).

What truly puzzles people is the fact that Vice Chairman Deng has completely overthrown the views, deeds and conclusions drawn by Chairman Mao after 1957. However, with regard to the various charges against the leaders of our army fabricated by the gang of four, Vice Chairman Deng has tried all possible means to add more charges instead of giving permission to correct and overthrow them.

CSO: 4005

TYPES OF MINES, DETONATORS DIAGRAMED

Beijing BINGQI ZHISHI (ORDNANCE KNOWLEDGE) in Chinese No 2, 1980 pp 19-21

[Article by Wang Weice (3769 0251 4595): "Mines and Detonators"]

[Text] The Function of Mines

Mines, as a weapon, played an important role in the battlefield very early in history. As far back as the Sung Dynasty, mines were used to kill and wound the enemy. In recent years, our nation's people have utilized mines in many curious ways during several revolutionary wars causing much hardship for the invaders and reactionary elements. The movie "Mine War" vividly describes the history of the heroic civil defense soldiers who coordinated with the main forces and used mines to strike at the Japanese invaders. The mine war was well known throughout East Asia and the Japanese invaders were scared. As military technology developed, the function of mines has become increasingly important. It is a powerful weapon to kill and wound soldiers, it can also destroy and incapacitate the moving fortresses on land--tanks. In the battlefield of the Korean War, the heroic Chinese People's Volunteer Army used anti-tank mines to destroy many American armored vehicles. The squads of military engineers of the People's Liberation Army also scored victoriously by using mines in the battle against social imperialist invasion of Zhen Bao Island.

At present, the world's nations are paying more attention to the development and deployment of mines. This also shows that in modern warfare, mines are a very important weapon. According to statistics, during World War II, almost 1/4 of the tanks lost by the British Army was destroyed by mines. In the Korean War, the number of casualties of the U.S. Armed Forces who died from mines or tricky explosives constituted 4 percent of the total number of casualties. The number of tanks directly destroyed by anti-tank mines constituted over 20 percent of the total loss of tanks. In the Middle East War of 1973, even though anti-tank missiles were used, 20 percent of the tanks of both sides were still destroyed by mines or airplanes. It can be seen that mines are one of the effective weapons that kill and wound personnel and destroy tanks and other vehicles.

Types of Mines

At first, the mine was a defensive weapon, mainly used to kill and wound living forces. As science and technology developed the function of mines also changed.

The mine is already an effective attack weapon. As mentioned above, mines are now a powerful weapon against tanks and armored vehicles. Not only can manual efforts to place mines be used to defend against attacking tanks but mines can also be placed by machines, missiles, cannons and airplanes to prevent the advances of tanks. There are several ways to classify mines. According to use, there are three types:

1. Anti-tank Mines

Their main function is to destroy tanks, armored vehicles and such technological ordnance to deprive them of mobility and combat capabilities. According to the part of the tank to be damaged, this type of mines can be subdivided into anti-tank mines (Figure 1), anti-chassis mines (Figure 2), and anti-side armor mines (Figure 3).

2. Anti-Personnel Mines

These utilize shock waves and broken pieces of the mines produced by explosion of the explosives contained to kill and wound living forces. They can be subdivided into explosive anti-personnel mines (Figure 4) and scatter anti-personnel mines. Jump mines (Figure 5) and directional mines (Figure 6) are scatter mines.

3. Special Purpose Mines

Mines for special purposes belong to this category, such as nuclear mines, chemical mines, flare mines, signal mines.

Based on the ignition principle, mines can be divided into contact mines and non-contact mines and time delay mines.

1. Contact Mines

The target comes into direct contact with the mine and sets off the explosion. These are contact mines. Based on different operating principles, this type of mines can be subdivided into pressure mines, pull (trip) mines, loose ignition mines and compound action mines.

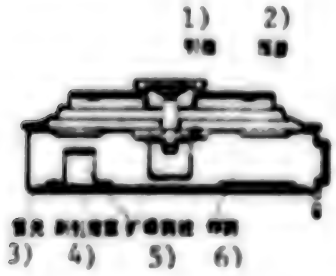

Figure 1. Anti-tank Mine that Damages the Tracks

1. Detonator
2. Pressure Cap
3. Mine Shell
4. Auxiliary detonator chamber
5. Explosion booster tube
6. Explosive charge

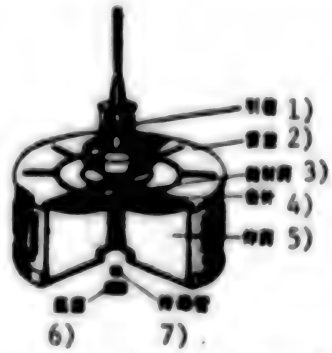

Figure 2. Anti-tank Mine That Damages Chassis

1. Detonator
2. Mine Cap
3. Ejective Explosives
4. Firing pin
5. Explosive charge
6. Bottom Plug
7. Transducer tube

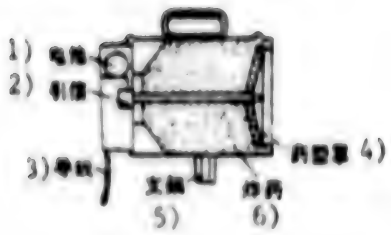

Figure 3. Anti-tank Mine That Damages Side Armor

1. Battery
2. Detonator
3. Wire
4. Support
5. Explosive charge
6. Charge cover

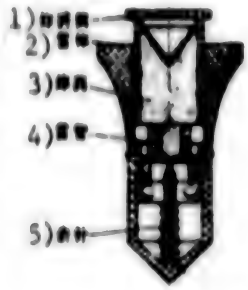

Figure 4. Explosive Anti-personnel Mine

1. Explosive Charge Canister
2. Mine Body
3. Explosive charge
4. Detonator
5. Firing Pin

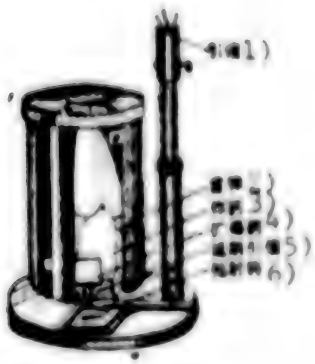

Figure 5. Anti-personnel Jump Mine

1. Detonator
2. Mine Bomb
3. Explosive charge
4. Booster explosives
5. Delay fuse
6. Ejective explosives

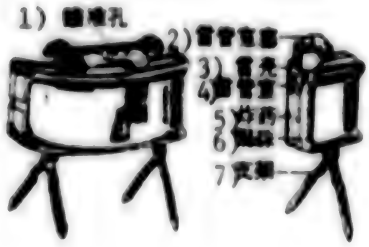

Figure 6. Directional Anti-personnel Mine

1. Aiming viewer
2. Detonator Chamber plug
3. Mine shell
4. Detonator chamber
5. Explosives
6. Steel bearing
7. Support

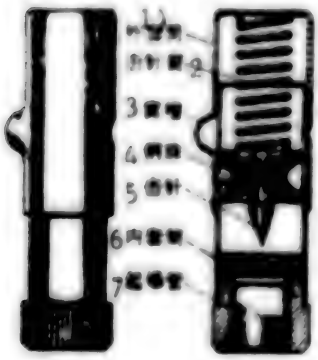

Figure 7. Pressure Detonator of Anti-tank Mine

1. Outer tube
2. Spring of firing pin
3. Groove
4. Steel bearing
5. Firing pin
6. Inner tube
7. Explosion tube

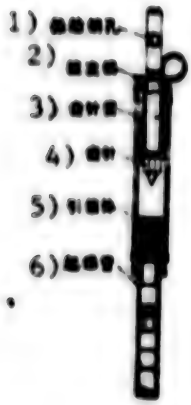

Figure 8. Pull Detonator

1. Hole of Safety pin
2. Pull cap
3. Spring of firing pin
4. Firing pin
5. Detonator body
6. Explosion tube

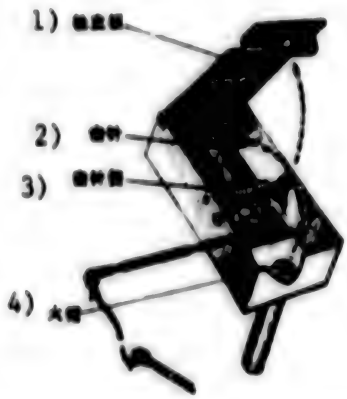

Figure 9. Loose Detonator

1. Loose plate
2. Firing pin
3. Spring of firing pin
4. Firing cap

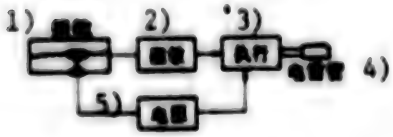

Figure 10. Principle of the Magnetic-Vibration Compound Detonator

1. Vibration sensor
2. Magnetic sensor
3. Execution
4. Electrical detonator
5. Power source

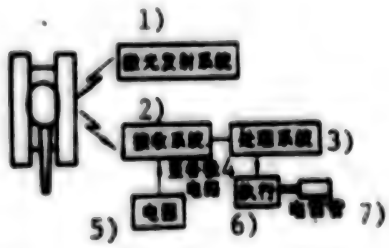

Figure 11. Principle of Laser Detonator

1. Laser firing system
2. Receiver system
3. Processor system
4. Circuit to each pole
5. Power source
6. Execution 7. Electrical detonator

2. Non-Contract Mines

Although the mines do not come into contact with the targets, they are touched off by action of the physical fields (magnetic, sound waves, vibration, light) of the targets. These mines are called non-contact mines. These mines can be exploded at the most beneficial time, therefore they can be more effective.

3. Time Delay Mines

These mines will automatically explode at a certain time after a preset delay. Its timing devices include clock mechanisms and also fluidics and electronics devices.

Structure of Mines

The mine consists mainly of a shell, a detonator, and explosive charge. Some special purpose and special function land mines also have transducers, parachutes and landing mechanisms. We will only introduce the several major components of mines in the following:

1. Explosive Charge

The power of the mine is mainly determined by the type, the amount and the shape of the explosive charge. The uses of mines are different and the structure of the explosive charge is also different. The explosives frequently used by mines are TNT, black powder or their mixtures. Explosive anti-personnel mines generally use TNT. Content of the explosive charge is from several dozen to 100 or 200 grams. Scatter anti-personnel mines use TNT and the content is from several dozen to several hundred grams. Anti-tank mines that are designed to damage the tracks and that contain a flat charge require 5 to 10 kilograms of TNT or TNT and black powder mixture. If the explosives are contained in strips, generally 2 kilograms of explosives are sufficient. Regardless of what type of charge is used they can all break the tracks of a tank. The first type of mines can also severely deform the load bearing wheel at the same time. Mines that damage the chassis of tanks mostly use a packed power charge. A large conical shell (generally over 100°) is a metal container of explosives turned into a "high speed shell" to penetrate the bottom armor of tanks. These mines generally require only 1 to 3 kilograms of mixed explosives of TNT and black powder. Mines that are designed to damage the side armor of tanks also use packed power charge, generally containing about 10 kilograms of mixed TNT and black powder. These mines can penetrate the side armor of tanks at a distance several dozen meters away from the point of explosion.

2. Shell of the Mine

The shell of the mine is used to contain the charge and the detonator. It can be pressed from thin steel plates or made from engineering plastics. The shell of the scatter anti-personnel mine is the basic component that produces scattered pieces. The broken pieces of the mine must possess a definite power: Broken pieces of jump mines generally have a killing or wounding radius of over a dozen meters while the broken pieces of directional mines can kill or wound up to a distance of 50 to 60 meters.

Detonator

The detonator is the important component that assures the mine will explode reliably and on time. The key to whether the mine can effectively function is the detonator, therefore people have compared the detonator to the "brain" of the mine.

Detonators of Mines

1. Contact Detonators

Anti-personnel mines and anti-tank mines mostly use pressure detonation, pull (trip) detonation and loose detonation. The structure of the pressure detonator is shown

Figure 7. When the mine is in a ready-to-detonate state, the cartridge of steel bearings in the detonator prevents the firing pin from dropping by blocking the hole in the inner tube. When the mine is pressed, the cover changes shape and the detonator receives from 10 to 30 kilograms of pressure. At this time, the reverse tube presses against the spring of the firing pin and moves down along the inner tube. When the groove on the outer tube comes into contact with the steel bearings, the bearings are pushed into the groove by the spring of the firing pin and the firing pin is released. The spring of the firing pin activates the firing pin to strike the explosion tube and the mine explodes. The structure of the pull (trip) detonator is shown in Figure 8. The pulling tab is pulled and the firing pin is released when it receives from 1 to 2.5 kilograms of pressure or more. The spring of the firing pin activates the firing pin to strike the explosion tube and the mine explodes. Loose detonation is mostly used for tricky installations (luring mines). Its structure is shown in Figure 9. When the heavy object is removed from the detonator, the release board releases its control of the firing pin. The firing pin is acted upon by the coil spring and turns, thus striking the firing cap and the mine explodes.

In recent years, to use explosions to open pathways for tanks or to detonate tactical nuclear weapons in mine zones and to be still effective against tanks, multiple action and explosion resistant detonators have emerged. Besides the mechanically operated contact detonators, new types of contact detonators such as electromechanic detonators and electronic breaker detonators have been developed.

2. Non-Contact Detonators

At present, non-contact detonators which have a wide application are magnetically sensitive detonators, vibration detonators, infrared detonators and compound detonators. Depending on whether the detonator has or does not have a radiative source, non-contact detonators developed very rapidly and have been used widely in anti-tank mines that damage the chassis and anti-tank mines that damage side armor.

The compound detonator sensitive to magnetism and vibration used in mines that damage tank chassis is a kind of defensive non-contact detonator and its operating principle is illustrated in Figure 10. When the tank enters a predetermined zone, the vibration sensor can receive the ground vibrations caused by the advancing tanks. This signal activates the magnetic sensor of the detonator and the electrical power of the mine is switched on. When the tank enters the most effective range of the mine, the magnetic sensor sends out a signal. After this signal is processed, it is transmitted to the execution device which explodes the electric detonator, causing the mine to explode. The advantage of this compound detonator is that it conserves the use of electric power and it has a higher resistance to interference. The anti-tank mine that penetrates the side armor has a laser detonator which is a kind of offensive non-contact detonator. Its operating principle is illustrated in Figure 11. When the tank enters the active range of the detonator in front, the laser beam emitted by the detonator is reflected back to the detonator by the side armor of the tank. A receiver in the detonator receives the echo wave signal and processes it, then transmits the signal to the execution circuit causing the detonator to explode.

Some special kinds of mines are also equipped with detonators that can receive remote radio signal commands. The mines can be controlled and activated for combat posture, deactivated and exploded.

The Direction of Development of Mines

The direction of development of mines is towards the following trends:

1. Small size, light weight, more power.

2. Reliable operation and higher resistance against explosions.

3. Completely save detonators to assure safety during logistics handling and safety in actual use.

Detonators used in mines laid mechanically and quickly over a large area include those mentioned above and also include delayed safety and self destructive devices to assure safety during the laying of mines and freedom of movement of motorized forces of allied troops. When using packed power charges for mines, non-contact detonators should be used as much as possible so that the power of the explosive charge can be most effective.

[Captions for diagrams by Zheng Hongran [6774 1347 3544]

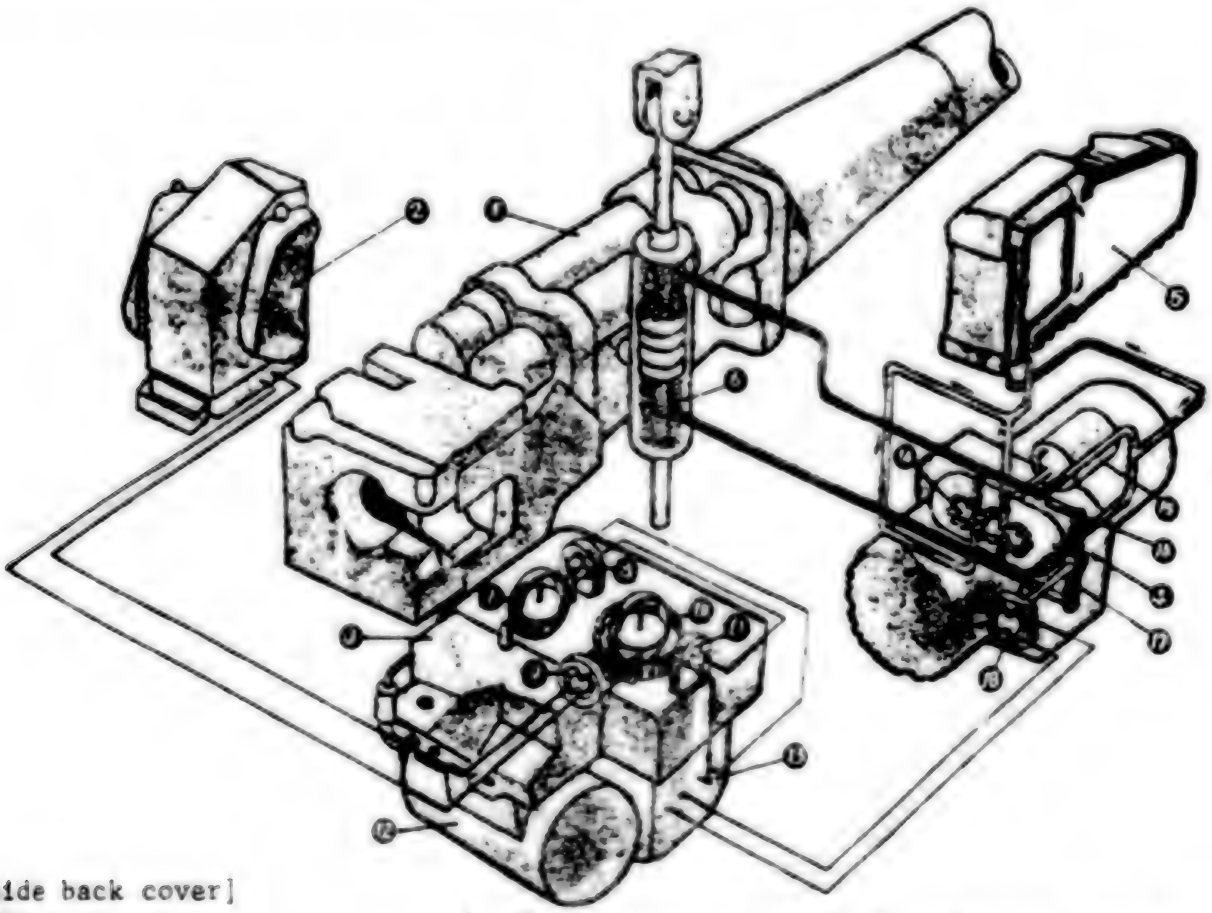

[Inside back cover]

1. Cannon
2. Control tower
3. Gyroscope system
4. Hydraulic pressure booster
5. Reserve gasoline tank
6. Dynamic oil tank
7. Rate gyroscope
8. Rotary transformer
9. Aiming magnet
10. Angular gyroscope
11. Rotary transformer
12. Converter
13. Electromtube magnifier
14. Gear oil pump
15. Oil pump motor
16. Closing valve
17. Lever
18. Control magnet

9296
CSO: 8111/0010

STRUCTURE, OPERATION OF TANK CANNON STABILIZER OUTLINED

Beijing BINGQI ZHISHI [ORDNANCE KNOWLEDGE] in Chinese No 2, 1980 pp 3-7

[Article by Qu Guoshan (1448 0948 0810): "Tank Cannon Stabilizer"]

[Text] In modern warfare, to effectively develop the tank's combat power and reduce the chance of being damaged by the enemy's anti-tank weapons, the mobility of the tank has been increased and correspondingly its travelling speed. A good aim and firing precision of the cannon in motion are needed so that the first shot can hit the target. For this, today's new combat tanks have utilized infrared or night viewing and night aiming equipment or viewing equipment in dim light, laser rangefinders, computers, computers for projectiles for the aiming, viewing and firing control systems. The cannon stabilizer has also been used.

This article is mainly an introduction to the application of a type of electro-hydraulic one directional stabilizer, its general structure and basic operating principles.

I. Application of the Stabilizer

Everyone knows that when tanks are travelling on an uneven road surface, the carriage of the tank continuously vibrates and shakes, thus the cannon vibrates with the carriage and deviates from its aiming angle (firing angle), as illustrated in Figure 1.

Because the road is crooked or because of the control of the vehicle, the cannon deviates from its original aim at the target as shown in Figure 2.

Obviously, under this situation, even when the enemy target has been discovered through the periscope, it would be difficult to operate the cannon's elevating mechanism and the aiming device and to rapidly complete accurate aiming and accurate firing within a short time. For this, many people have spent much effort and have taken various measures (such as selecting good vibration reducing equipment of good performance, making short stops or reducing speed during firing and strict training of tank personnel etc). But although these measures increased the firing accuracy of the cannon on tanks, the basic problem of achieving an ideal aim for firing while the tank is travelling has still not been solved. Afterwards, attempts were made to think of a way to install a special kind of automatic adjustment

equipment while the tank is travelling so that the cannon can be adjusted against the vibration of the carriage of the tank to effectively assure that the direction of aim will not be distorted by vibration of the carriage, as Figure 3 and Figure 4 show. This type of automatic adjuster (i.e., stabilizer) was first developed and equipped on armored vehicles during the latter part of World War II, and in actual combat, relatively ideal results were achieved.

Figure 1. High and low vibration of the cannon without stabilizer

Figure 3. Cannon stabilized in elevation

Figure 2. Horizontal vibration of the cannon without stabilizer

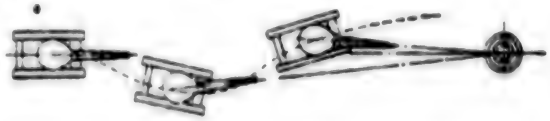

Figure 4. Cannon stabilized in traverse directions

To further explain the application or use of the stabilizer on the cannon of tanks, the following brief introduction talks about the several kinds of vibrations of the tank carriage and their effect upon the accuracy of firing of the cannon.

It can be seen from Figure 5 that when the tank is in motion, the carriage of the tank moves forward at velocity u and at the same time the carriage vibrates vertically at a rate W, at an angular rate of Q on the plane of the vertical cross section, an angular rate φ on the horizontal plane, a cross angular rate of u on the cross section plane, and possible parallel sliding forward and sideways horizontally on the cross section plane, etc. These vibrations affect the accuracy of firing to varying degrees.

Vertical vibration of the carriage:

The carriage vibrates up and down at the rate W, as shown in Figure 6. This causes the barrel's axial line to shift in a parallel fashion, and thus changing the projectile angle of the shell. But this type of vertical vibration is not large. On medium road surfaces and travelling at medium speed, the vibration is between 100 and 150 millimeters, therefore the shell fired from the gun undergoes a deviation of between 100 and 150 millimeters in the vertical direction. The effect upon the accuracy of firing is not obvious.

Horizontal vibration of the carriage:

The carriage sways back and forth at an angular rate of $\dot{V}$ along the OX axis within the cross section plane causing the flank axial line of the cannot to slant, as illustrated in Figure 7. Under this condition, if the cannon is fired straight and the firing angle is not large, the error of firing is not too obvious. Relatively complete firing control systems have a flank axis slant sensor to correct the slant.

Angular vibration within the horizontal plane of the carriage:

The carriage vibrates in the horizontal plane at an angular rate of $\dot{\psi}$ about the OZ axis, as illustrated in Figure 8. This type of vibration will cause the horizontal sweep of the fired shell to increase and the error will be more pronounced than in the two cases above.

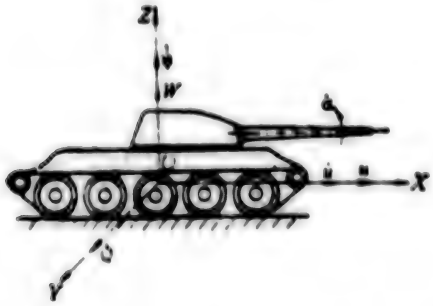

Figure 5. Vibration of the carriage of the tank

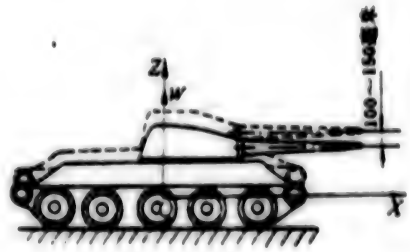

Figure 6. Vertical vibration of the carriage. 100-150 millimeters

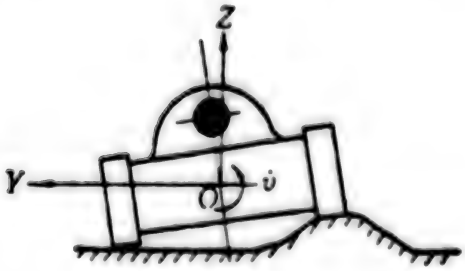

Figure 7. Cross section angular vibration of the carriage

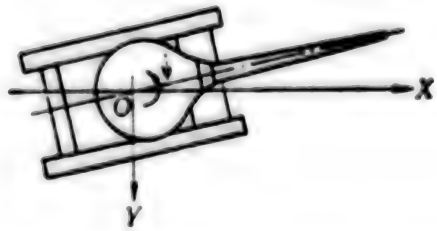

Figure 8. Horizontal angular vibration of the carriage

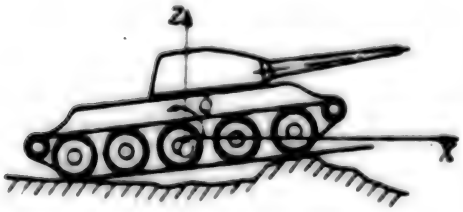

Figure 9. Vertical angular vibration of the carriage in the vertical plane

The carriage vibrates in the vertical angle within the vertical firing plane:

This means the carriage vibrates in a vertical angle from the center of vibration of the carriage (center of elasticity) at an angular rate $\dot{Q}$ within the vertical firing plane. This is mainly caused when both tracks of the tank run over an uneven surface, the front of the vehicle is raised and the back of the vehicle correspondingly is lowered, or because the driver suddenly steps on the throttle and increases the speed of the vehicle or because of unskilled operation of the clutch. This type of vibration will cause a violent change in the axial line of the barrel in the vertical firing plane and a continuous change in the firing angle leading to great deviation in the firing range or the height of firing. The prevision of firing is thus drastically reduced. For example, according to calculations, when the center of vibration of the carriage of the tank is 6 meters from the plane of the muzzle, the initial speed of the shell is 900 meters/second, the delay in firing is 0.16 seconds, the average angular rate of vertical vibration within the vertical firing plane of the tank is 3.7 degrees/second. When the traveling direction of the tank and the aim of the gun are the same and firing at a vertically fixed target at 1,000 meters, the vertical deviation of the shell from the target will reach 10.35 meters.

It can be seen from the above analysis that the vertical angular vibration within the vertical firing plane of the tank exerts the greatest effect upon firing precision, and horizontal angular vibration exerts the second greatest effect. Therefore, the stabilizers equipped on the guns of present-day tanks are mainly to stabilize vibrations in these two directions.

Vertical stabilization within the vertical firing plane of the cannon is also called elevation stabilization. Elevation stabilizers can automatically adjust the cannon so that it will not be affected by the vertical angular vibration of the carriage, thus assuring that the high or low aiming angle of the cannon does not change.

Traverse stabilization of the cannon is also called turret stabilization. The traverse stabilizer can automatically adjust the turret so that it will not be affected by the horizontal angular vibration of the carriage to assure the horizontal aim of the cannon does not change.

Ordinarily, cannon stabilizers with only an elevation stabilization function is called a one directional stabilizer. Stabilizers with both an elevation and traverse stabilization function is called a two directional stabilizer.

Because of the application of the stabilizer on tank cannons, the firing precision of the gun while the tank is in motion has been raised. The basic operating principle of the stabilizer is mainly based on the gyro effect. This means utilizing the gyroscope to exercise automatic control of the cannon. Before introducing the operating principle of the stabilizer, the top and the gyroscope will be briefly described.

II. Gyration and the Gyroscope

(1) Gyration

Everyone knows that all bodies rotating about their spin axis have some common characteristics, for example, a fixed axis and precession under external forces.

These characteristics are only visibly evident when the revolving body is rotating about its axis of rotation at a high speed. Generally the above characteristics of rotating bodies at high speed are called the gyro effect.

Fixed axis of the top: Figure 10 shows an ordinary top for children and it is also an actual toy. When the top rotates about its acis of rotation at high velocities and if the top is not affected by an external force, the direction of the axis of rotation will not change from its original spatial position. This characteristic of the top is called the fixed axis characteristic. The faster the rotation of the top, the greater the quality, the greater the moment of motion and the more stable it is.

Precession of the top: When an external force is applied to a free top rotating at a high angular speed Ω, i.e., when applying force F on the axis of rotation OZ, as shown in Figure 11, the axis of rotation will shift from its original position but the direction of deviation will not be in the direction of the push but at a 90° or 270° angle (depending on the direction of the spin of the top). If the external force is removed as soon as the top shifts, the top will gradually resume its original state. When the external force is applied continually, the top will continue to shift, and the greater the external force, the faster the shift. This characteristic of the top is called precession.

The pattern of precession of the top i.e., the direction of precession is an attempt to make the vector Ω of angular velocity of the spin of the top coincide with the vector M of the moment of the external force that caused the top to shift.

The direction of the vectors of the angular velocity and the moment can be determined by the right hand method. Position the four fingers of the right hand (slightly bent) perpendicular to the thumb, and point the four fingers in the direction of rotation of the angular velocity (or the direction of the moment), then the direction pointed out by the thumb is the direction of the vector of the angular velocity (or moment).

Moment of the top:

To explain the moment of the top, let us first perform an experiment. As shown in Figure 12(a), use a string and tie it to a round plate. When it is not in motion, the plate will hang down due to its own gravitational weight G. When the plate is placed in a horizontal position and is rotated at a high angular velocity of Ω, the plate will not fall from its horizontal position even though it is still under the pull of its own weight. Let us analyze this physical phenomenon. When the plate rotates about its spin axis OX at an angular velocity Ω, and under the pull of its own moment Mg of its weight (the direction of the vector of Mg is the negative direction of the axis OY), the plate will move about the OZ axis at an angular speed w, as shown in Figure 12(b). The plate, under a combination of the two movements, will produce an acceleration called the coriolis acceleration. We know that a substance that has mass and acceleration will produce inertia. This inertia forms a moment Mr on the OY axis (the vector of Mr is in the direction of the OY axis), and this is the inertia moment. Its magnitude and gravitational moment Mg are equal but are in opposite directions. Thus, the plate's falling graviational moment Mg is counterbalanced by the inertia moment Mr. Therefore the plate can rotate on the horizontal plane without falling.

The top is equivalent to a round plate rotating at high speed, as shown in Figure 12(c). When the top rotates about its spin axis AZ at a high angular velocity Ω, an addition of an external moment M (equivalent to the gravitational moment of the round plate), when its vector along the OY axis is in the opposite direction causes a precession about the OX axis at angular speed W. This produces an inertia moment Mr along the positive direction of the OY axis, balancing the external moment M. This inertia moment is also called gyro moment.

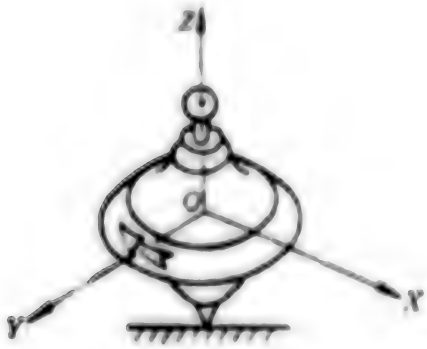

Figure 10. Fixed axis characteristic of the gyro.

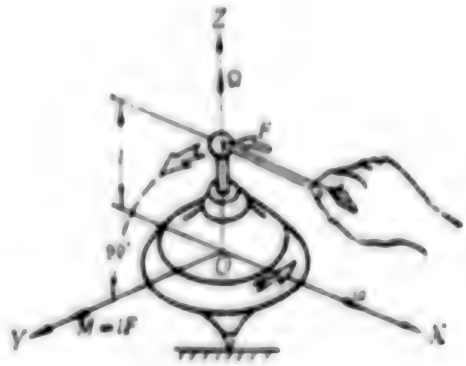

Figure 11. Precession of the gyro

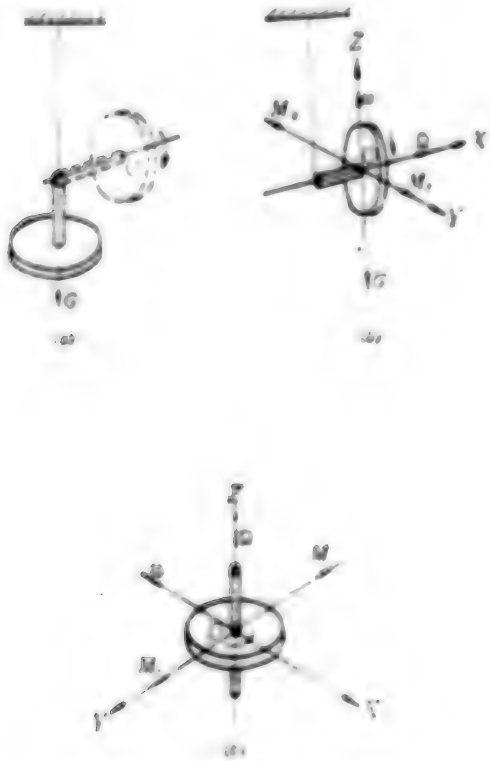

Figure 12. Moment of the gyro

(II) Gyroscope

A gyroscope is an instrument or equipment built on the gyro effect. Based on the number of rotational axis about which the gyro can rotate, there are the free gyroscope and the rate gyroscope. The gyroscope is generally powered electrically, pneumatically or by another form. The electrical gyroscope is actually a micro high speed rotary (generally above 15,000 rotations/minute) triple phase alternating electric motor. The electrical motor's gyro rests outside of its stator for greater momentum. Therefore, the electric gyro is also called a gyro motor.

Structure and Operating Principles of the Free Gyroscope:

The free gyroscope mainly consists of a gyro motor, an inner frame, an outer frame, and a gyro base, as shown in Figure 13. The gyro motor is affixed on the inner frame B by its spin axis AA. The inner frame is affixed to the outer frame C by its two semi-axis BB. The axis CC of the outer frame is affixed on the base K. Between each rotating axis and corresponding holes are high precision ball bearings. In this way, the gyroscope can rotate about three axis i.e., the gyro rotates about its spin axis AA, the gyro and the inner frame rotate about the BB axis together and the gyro, the inner frame and the outer frame rotate about the CC axis of the base together. In structure, the centers of gravity of the gyro, the inner and the outer frames and the intersecting axle centers of the three mutually perpendicular axis (AA, BB, CC) coincide exactly and are kept strictly in this position. The point is called the gyro support. This arrangement gives the gyro a three-dimensional freedom in space, therefore it is called a free gyroscope.

In a free gyroscope, when the gyro motor rotates at angular velocity Ω about its spin axis AA and if the base is rotated about the relative axis CC at angular velocity Wc, as shown in Figure 14, then the direction of the spin axis AA of the gyro will not change and will remain at its original spatial position when the base rotates because of the fixed axis characteristic of the gyro. If a compass is placed on the CC axis of the outer frame and a corresponding graduation is marked on the base, then the slanting and rotating angle between the outer frame and the base, i.e., the angle of the plane M of the base relative to the plane H of the outer frame can be measured.

Now let us look at another situation. Keep the base of the gyroscope stationary and apply an external moment M_B to the BB axis of the inner frame, as shown in Figure 15. At this time, the inner frame does not turn in the direction of the external moment, but the outer frame will rotate about the CC axis at angular velocity Wc, i.e., this is the precession of the gyro (because, when the external moment acts upon the BB axis of the inner frame, the outer frame immediately undergoes a precession, causing the gyro to simultaneously rotate about the two axis AA and CC. Therefore, a gyro moment Mr_B is created on the BB axis of the inner frame. This gyro moment counterbalances the moment of the external force, and the inner frame acted upon by the external force does not rotate). The greater the moment of the external force M_B the greater the angular velocity Wc of the precession of the outer frame. After the moment of the external force ceases, the outer frame immediately stops its precession, and the gyro axis stabilizes at a new spatial position. In this way, the slanting and turning angle of the outer frame relative to the base of the gyroscope acted upon by a definite moment of external force can be measured.

Utilizing the characteristics of the free gyroscope, the angle of the base plane relative to the plane of the outer frame can be measured. Therefore, the free gyroscope is also called the angle gyroscope. Ordinarily in the various stabilizers, it is used to measure (sense) the angle of deviation of the object to be stabilized from the originally stable position under external interference.

The structure and the operating principle of the rate gyroscope:

The free gyroscope becomes the rate gyroscope after one frame is removed so that it loses freedom in one of the dimensions, as shown in Figure 16. Thus, when the gyro motor turns at angular velocity Ω, and when the base rotates about the CC axis at angular velocity W_c, the inner frame will undergo a precession about the BB axis at angular velocity W_B. The greater the angular velocity of the slanting rotation of the base, the greater the angular velocity of the precession of the inner frame becomes. When the base ceases to turn, the gyro and the inner frame will stop at the position after the precession. Thus, when the inner frame undergoes precession, the angular velocity of rotation of the base can be measured at any moment by means of the angle of slanting and rotation of the needle. Therefore the rate gyroscope is also called the velocity gyroscope. In stabilizers it ordinarily serves to measure (sense) the angular velocity of deviation of the object to be stabilized from the stable position.

Since the rate gyroscope has lost freedom in one dimension, the spin axis of the gyro does not possess the characteristics of remaining at its original position, i.e., its fixed axis characteristic. At the same time, for the gyro to rapidly resume its original position after undergoing precession, generally one of the semi-axis of the inner frame is made into a spring torque axis and the other end is affixed to the base. Because of the use of the spring axis, the gyro will vibrate at a certain neutral position. Thus the rate gyroscope has an air to hydraulic damper. (To be continued)

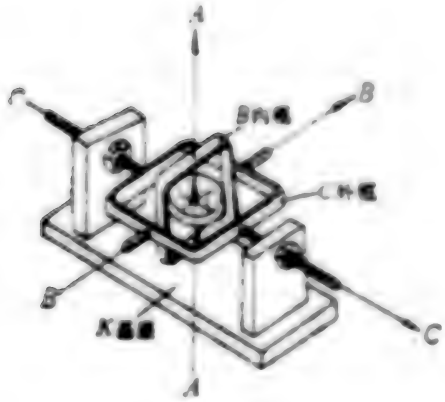

Figure 13. Free gyroscope

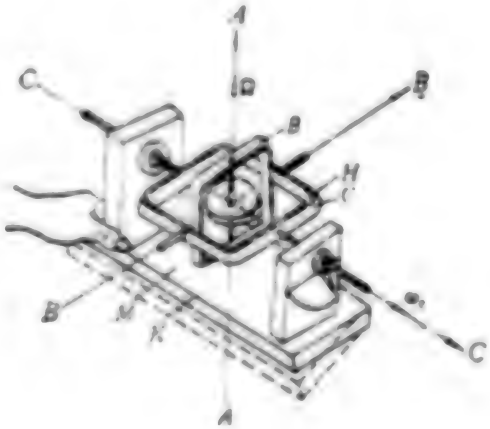

Figure 14. Fixed axis characteristic of the gyro when the base rotates

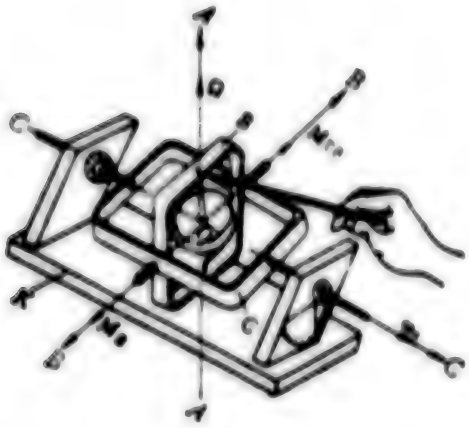

Figure 15. Precession of the gyroscope under external moment of force

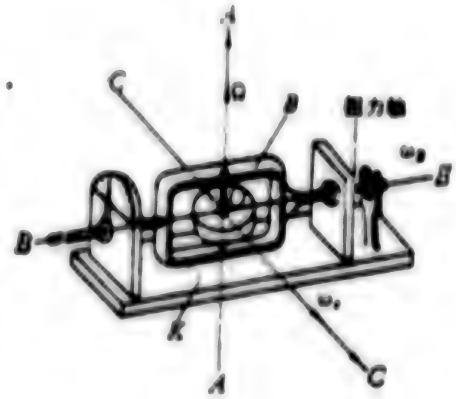

Figure 16. Rate gyroscope

Captions to figures by Zheng Hongran [6774 1347 3544]

9296
CSO: 8111/0010

BRIEFS

QINGHAI ENLISTMENT--Departments concerned in Qinghai Province held meetings to make arrangements for 1980 enlistments beginning 1 November. They decided: In rural areas, youths aged 18 and 19 will be drafted if they are educated youths residing in the countryside or mountainous areas or if they are middle school graduates from families having adequate manpower. In urban areas, 1980 high school graduates aged 17, 18 and 19 will be drafted. However, those who are working or continuing studies will not be drafted. In minority areas, education restrictions on draftees can be eased accordingly. [Xining Qinghai Provincial Service in Mandarin 1100 GMT 29 Oct 80 SK]

XINJIANG PLA UNITS MARK CORBAN--Urumqi, 21 Oct (XINHUA)--Cadres and fighters of all nationalities of Urumqi PLA units celebrated the Islamic Festival Corban on 20 October together with the local people in various parts of Xinjiang. [OW261400 Beijing XINHUA Domestic Service in Chinese 1201 GMT 21 Oct 80 OW]

CSO: 4005

SOCIOLOGICAL, EDUCATION AND CULTURE

UNIVERSITY PROFESSOR URGES ADOPTION OF ACADEMIC CREDIT SYSTEM

Shanghai JIEFANG RIBAO in Chinese 19 Aug 80 p 2

[Article by Li Zhiyuan [2621 1807 6678], assistant professor at Shanghai Academy of Finance and Economics: "Higher Education Should Adopt the Credit System Rather Than the Academic Year System"]

[Text] Institutions of higher education throughout the world use mainly two systems of schooling: one is the credit system under which after matriculation a student is allowed to graduate on completing a specific number of credits, and the other is the academic year system under which after matriculation a student is graduated on completing a specific number of years of schooling. China used both systems in higher education before Liberation, but after Liberation it adopted uniformly the academic year system which is still in force. Which system is better is a question deserving of discussion. I think that the credit system is better than the academic year system.

1. The credit system is better able to fully mobilize the initiative of the students to study and is better for producing qualified personnel faster.

The academic year system currently used is overly restrictive with regard to the years a student can study. The 4-year university arranges the courses of all specialties into 8 semesters over 4 years without regard to the students' level or ability. Every semester they must take a certain number of courses and study for 4 years, then are graduated. Students with more ability cannot take more courses, nor can they shorten their study time. Students with weaker foundations cannot take fewer courses and even though they do not learn as well, also must graduate on time. This "cutting everything with one knife" method is not good for mobilizing the initiative of students to study and is especially bad for those students with good levels and great potential.

If the credit system is adopted these defects will be corrected. The credit system is more flexible. It also arranges the required courses into 8 semesters over 4 years, but each course is assigned a certain amount of credit depending on the time required in class and the degree of difficulty (the amount of credit is roughly the same as the number of class meetings per week, and although there are variations, they are not large ones) and the student can take a greater or lesser number of credits depending on his own ability and time. This way, good students can elect to take more credits each semester and can complete the necessary number

of credits in less than 4 years, graduate and go to work ahead of time. Weaker students can take fewer credits each semester. In this way, although they study 6 to 12 months longer than the others, they have a good grounding in their fields, and this is much better than not learning well. If this were done, it would guarantee the quality of students, produce qualified personnel earlier and be better for both the individual and the nation.

2. The credit system is better for teaching students in accordance with their aptitudes.

University professors fear mostly the unevenness of student abilities. It is a great strain in teaching, for if they attend to the good students, they cannot attend to the poorer ones, and finally they can only adopt a compromise method and attend to the large majority in the middle. This is very bad for selecting the best and training qualified personnel. The academic year system produces just such a situation. After students matriculate they are assigned to a class and while in the first year it is all right, after the second the unevenness becomes more and more clear, but because the classes are rigidly assigned, they cannot be revised and the faculty can only adopt methods which cut the feet to fit the shoes, and this has an impact on raising the quality of teaching.

If the credit system is adopted, courses will be chosen by the students themselves, and their interest in study will become greater and their drive to study will also become greater. Faculty will also have some leeway as far as students who elect their courses are concerned and students who have not done as well can be either refused or made to postpone electing a course and in this way it can be guaranteed that the levels of students in the same class is not too disparate, and this will be good for teaching students in accordance with their aptitudes.

3. The credit system can better adapt to new situations in the rapid development of science.

Since the 1970's, some new situations have appeared because of the rapid development of science: in the past the liberal arts and the sciences and engineering were unrelated, but now there is science and engineering in the arts, and arts in the sciences and engineering. In the past a discipline could resolve its own questions, but now many disciplines must be combined to resolve a question. Thus the courses which a student must take are no longer only in his own field, or can even be handled independently by one department. The results of implementing the academic year system necessarily arranges the courses in an overly rigid manner. Although in their upper-class years some advanced courses can be elected, the system is far from able to adapt to the demands of the objective situation, and furthermore, one field or one department cannot offer all courses. If the credit system is used, the situation becomes quite different. A student can choose courses quite freely, especially when he gets to his upperclass years he can go outside his field and department or even school to take related courses in accordance with his own study direction. This is good for the student's learning, and can produce qualified personnel quickly and can create conditions for the development of new sciences.

4. The credit system allows working cadres to participate in afterwork education.

Because of a decade of calamity, the professional level of many working cadres is far from up to the demands of the objective situation, but it is impossible to transfer a great many cadres out of production to study. The best method is to create conditions which permit them to use afterwork time or available time for advanced study. Generally speaking, they demand only relevant knowledge which will help them resolve a certain question, and do not demand longterm systematic and comprehensive study. The academic year system currently in force has little flexibility and cannot adapt to the demands of this kind of special circumstance. If the credit system is adopted, working cadres can go to university and choose courses according to the demands of work and as time permits, and as time goes on they can complete all the credits and through examination qualify as university students. Therefore, if higher education institutions adopt the credit system it will be good for motivating working cadres to participate in afterwork study and further raise their professional and managerial levels.

8226
CSO: 4005

SOCIOLOGICAL, EDUCATION AND CULTURE

MASSES URGED TO RESPECT, STRIVE FOR KNOWLEDGE

Nanjing XINHUA RIBAO in Chinese 12 Aug 80 p 2

[Article by Lu Gan [7120 1626]: "On the 'Cultured' and the 'Uncultured'"]

[Text] In social life, people frequently have certain biases toward certain things. The valuing of the "uncultured" and disdain for the "cultured" is one type of bias. People with this type of bias regard the "uncultured" as glorious and valuable, as if the "uncultured person" were a synonym for the "revolutionary." In their eyes, the "cultured" are "sour and stinking things", and cultured, educated intellectuals are the "capitalist class." They have even been categorized as the "old nine" and alienated. Naturally, during the 3 years since the smashing of the "gang of four", there have been fewer and fewer people with this type of bias, yet this type of bias still plays a role in certain units. Some intellectuals have been unable to attain appointments, some have been appointed incorrectly, and some are employed but not trusted. All of this is related to this type of bias.

I have heard that in a certain county there is a high school principal who has not even had one good class in his 20 years of work in the school and yet he does not even have the slightest guilty conscience about this. He hasn't gone out into the fields and worked, and always rolls his pants up high. He runs about inside and outside of school, and after a while people have come to call him "the clod-hopper principal." When he heard this, he was very proud. And how did this principal treat the teachers? If their hands had calluses, it was good to roll their pants up high. If their clothes were clean and tidy, they were very polite, and their hands had no calluses, even if the quality of the school was very high, they were not appreciated and he sarcastically ridiculed them for having a "capitalist class ideology" and for "selling quick remedies."
If we value the "uncultured" and disdain the "cultured" to the point of confusing right and wrong, how can we correctly implement party policies concerning intellectuals?

In fact, "uncultured" is not worthy of praise. An "uncultured person" is the strong catastrophic imprint of the old society on the workers and peasants and is not an innate feature of the workers and peasants. On the contrary, "cultured" is worthy of honor. Cultural and scientific knowledge is a sign of human civilization and is the natural indispensable force for improving society. Therefore, our party has consistently promoted the study of cultural and scientific knowledge and has sought the intellectualization of worker and peasant cadres. In 1939, Comrade Mao Zedong personally drew up the resolution "Magnanimously Accept the Intellectuals," in which he clearly pointed out: "Without the participation of the intellectuals, the victory of the revolution is impossible." Now, in our building of the four modernizations, the "cultured" should be increased and not diminished. To mold a society of high-level matter and spirited civilization we must first have these signs and devote ourselves to having people with the necessary cultural and scientific knowledge. Only if we have these kinds of people will we be able to form an effective administrative machine and be able to control modern technological and scientific knowledge. An uneducated person cannot deeply understand the value of culture and science, and those lacking in scientific knowledge cannot control and utilize the laws for building a modernized economy. If this type of person functions as a leader, he will be unable to respect and select able subordinates. Is this principle not clear?

The viewpoint of valuing the "uncultured" and disdaining the "cultured" is intolerable; this is the conclusion reached after people have suffered much. Early, before the Cultural Revolution, the bias of despising culture and looking down on intellectuals had already often emerged to obstruct our line of vision. During the Cultural Revolution, to realize their wild ambitions of seizing party power, Lin Biao and the "gang of four" pushed this bias to the extreme and tried to destroy culture. At the time, the desks and chairs in some schools flew about violently, creating a military battleground. Some scientific research units stood in great numbers with spears, and the precious materialized into ashen butterflies. Several thousand years of meticulously preserved famous historical locations and cultural relics were trampled, and cultural and educational facilities painstakingly built up over several decades were in total disarray. These material losses further caused the cream of the nation and people, the masses of specialists, to suffer injustices and even death. The studies of innumerable students were cast aside and neglected for 10 years, causing a temporary shortage in talented individuals, so that now there are difficult problems in building the four modernizations.

Recently, Comrade Song Renqiong [1345 0117 4522], director of the Central Organization Department, pointed out: "From now on, for the recruiting of cadres not engaged in production, we should pay complete attention to cultural level and specialized knowledge and strictly, according to the requirements for cadres in the new period select young graduates mainly from universities, specialized

secondary schools, those of the same level. In general they should not be selected directly from workers and peasants with low cultural levels." I think this important policy decision will have a decisive significance for realizing the four modernizations. Yet, if we want this policy decision to be universally carried out for the people, the bias of "uncultured" and "cultured" must be eliminated. At present, are there not people who say: "If we want to value the use of cultured people, the uncultured will be unpopular," and "Then do we still need worker and peasant cadres?" This type of viewpoint is wrong.

In building the four modernizations, "uncultured people" will be unpopular; as for the worker and peasant cadres, that is another matter. It goes without saying that after the founding of the People's Republic, all intellectuals came basically out of worker and peasant households, and after 30 years of study and training most of the intellectuals from the old society have already become part of the working class. Intellectual cadres are also worker and peasant cadres. Those who have come directly from the workers and peasants originally had no culture or were culturally lower "worker and peasant cadres." Many among them diligently studied and soon shed their "uncultured" hat, becoming useful [persons] with rich practical experience and suitable cultural levels. The problem rests only with those long "uncultured" comrades who should quickly come to realize the truth and seize the opportunity to study hard and strive for early proficiency in specialized knowledge. In this way they can become experts in their work and keep in step with the building of the four modernizations.

9480
CSO: 4005

SOCIOLOGICAL, EDUCATION AND CULTURE

JIAOTONG UNIVERSITY EXCHANGE PROGRAM PRAISED

Shanghai JIEFANG RIBAO in Chinese 21 Aug 80 p 1

[Article: "Smash the Rigid Situation of Limiting Personnel Movements; Shanghai's Jiaotong University Implements Personnel Exchange Program; Sends Out Staff To Support Units Outside University and Brings In Small Number of Urgently Needed Teachers."]

[Text] Since early this year, Shanghai's Jioatong University has been carrying on a personnel exchange, with 200 teaching, administrative and working staff happily going to factories, research institutes and other schools to work while another group of personnel are going through the transfer procedures. At the same time, a small group of specialist teachers and technicians urgently needed by Jaiotong University has been transferred to the University. Because of this personnel exchange, Jiaotong University has outside talent for newly established specialties and units and has made preliminary steps to change the rigid situation which has existed heretofore that these people could only be brought in and not sent out, bringing great vitality to the teaching, administrative and working staff.

Over the years, the staff of Jiaotong University has become enormous because of the policy of only bringing in personnel and not sending them out. The ratio of staff to students among the nearly 10,000 present staff and students is nearly 1:1, and there is no way to replenish the strength of mainstay faculty and new students within the stipulations relevant to personnel strength. And the contradiction of insufficient work strength in some areas but the oversupply of talent beyond authorized strength is a rather sharp one. Since the smashing of the "gang of four," the school's party committee has adopted a series of important measures to find suitable work for the broad faculty and constantly improve their working and living conditions, so they could get what they deserved and develop their strengths, but there is still an oversupply of highly trained talent in some areas, while some capable "heroes" have no room to exercise their talents. The overwhelming majority of those of the faculty which have been retained, are graduates of the same school and have become established in the faculty so basically that they are all of the same mold, creating, over a long period of time, the phenomenon of something close to biological "inbreeding" which prevents learning and absorbing the best of other schools. In addition, during the past few years, over 1,000 young workers have been assigned work by the socially adopted methods of "unified arrangement," "group recruiting of workers," and "replacement system." They have

been the victims of a decade of disorder, and the cultural level of many is too low for them to be suited to the demands of university work.

After Jiaotong University began personnel exchange work, the University's personnel office organized cadres to go to departments and teaching and research sections to understand thoroughly the personnel level of the basic units and the needs and shortages of specialized personnel. Throughout, the University's party committee conducted numerous specific studies and deployments and repeatedly explained to departments and teaching and research sections the profound significance of this personnel exchange work. Then with the departmental party general branch as the basic unit, they conducted some ideological work among the Jiaotong University comrades who were being transferred so that they would understand that shifting from Jiaotong University to factory, research agency and newly established school work was so that individuals could fully develop their talents, get what they deserved and play an even greater role. At the same time, they thoroughly resolved the actual problems of transferring personnel, mainly that technical cadres needed jobs suited to their specialties without influencing the material treatment of transferred personnel and paying attention to satisfactorily resolving questions on conforming to conditions of promotion so that they would be happy to undertake new work posts.

This exchange of Jiaotong University personnel involved 10 specialties: dynamic mechanics, engineering mechanics, applied physics, applied mathematics, precision instruments, electronic engineering, electrical engineering and computers. Some of the personnel graduated from University in the 1970's, some in the 1950's and 1960's and even some graduated about the time of Liberation. They went to the First Bureau of Electromechanics, the Second Bureau of Electromechanics, the Bureau of Handicrafts, and universities, factories and research institutes subordinate to research agencies, After arriving at their new units, many of the personnel involved did very good work, some became the responsible persons of a technical section, some became teaching mainstays of schools, some independently shouldered important tasks. Faced with these realities, comrades who were transferred out said, with deep feeling, "The Jiaotong University party committee really wanted us to play a role."

Some of the personnel moved out, but some also moved in. In the past two years, Jiaotong University has newly built a science department and an industrial management department and some new frontier specialties, to strengthen the teaching and research in basic theory and sophisticated science, and now has transferred in some mainstay cadres and technicians who have expertise in these specialties. After their arrival at Jiaotong University, some have become mainstays in the new specialties there, some have made contributions to the school by training graduate students to go abroad. After being transferred to Jiaotong University to work, one professor established with the other professors a Light Communications Research Agency and became a leader in this new field. Jiaotong University is still considering the weaknesses in the learning of students at industrial and scientific universities and is preparing to provide electives for them in literature, music and the arts. The necessary faculty is already being recruited, and over 2,000 applications have been received from all over the country. Jiaotong University will either transfer in or hire the best of them.

8226
CSO: 4005

BRIEFS

XINJIANG JAPANESE LANGUAGE SOCIETY--The Urumqi area Japanese Language Study Society, the first foreign language study mass organization in Xinjiang, was established on 6 October. The society will support teaching of the Japanese language and organize translation of Japanese publications and introduction of advanced science and technology from Japan. [Urumqi Xinjiang Regional Service in Mandarin 1620 GMT 23 Oct 80 OW]

NEI MONGGOL SCHOOL ENROLLMENT--Nei Monggol's 1980 technical school enrollment has concluded, and 9,000 new students have begun their studies. There are 74 technical schools or technical study classes throughout the region with some 16,900 students attending. [Hohhot Nei Monggol Regional Service in Mandarin 1100 GMT 30 Oct 80 SK]

JILIN JOINT UNIVERSITY--A joint university was recently established in Jilin Municipality, Jilin Province, under the sponsorship of Jilin Normal University, Jilin Institute of Electrification of Metallurgical Industry and Jilin Engineering Institute. The joint university has departments in Chinese languages, the chemical industry, mathematics, the electrification and automation of industrial enterprises and chemical engineering. Applicants should either be educated youths in urban areas of Jilin Municipality or those settling in the countryside. They should either be educated youths in urban areas of Jilin Municipality or those settling in the countryside. They should pay 10 yuan per person as a monthly tuition fee. Following graduation, they will receive the same treatment accorded those from other universities. [SK300702 Changchun Jilin Provincial Service in Mandarin 1100 GMT 29 Oct 80 SK]

KAZAK LANGUAGE PUBLISHING HOUSE--The Ili People's Publishing House, the first Kazak language publishing house in China, starts operating in Xinjiang's Ili Kazak autonomous prefecture. Among the first 17 books to be published in the Kazak language are some dealing with 4 major inventions in ancient China and other topics. Besides this publishing house, there are at present other Kazak language editorial departments at the Beijing Nationality Publishing House and the Xinjiang People's Publishing House. [Urumqi Xinjiang Regional Service in Mandarin 1620 GMT 30 Oct 80 OW]

XINJIANG PUBLISHING HOUSE--Urumqi, 29 Oct (XINHUA)--China's first Kazakh language publishing house--the Ili People's Publishing House--was recently established in Kuytun City in Ili Kazakh autonomous prefecture, Xinjiang. To be published initially will be "The Four Major Inventions of Ancient China," "Scientists on Mathematics, Physics and Chemistry," long poem "The Stars of Junggar Basin" and 14 other

books. In addition to this Kazakh language publishing house, Kazakh language editorial groups have been established in the Beijing Nationalities' Publishing House and the Xinjiang People's Publishing House. [Text] [Beijing XINHUA Domestic Service in Chinese 0116 GMT 29 Oct 80 OW]

SHANDONG ISLAMIC CONGRESS--The second Shandong Provincial Islamic Congress was held 17-23 October in Jinan. Over 140 Muslims of Hui nationality and Islamic patriotic personnel attended. Representatives of Christians, Catholics, Buddhists and Taoists extended congratulations. The congress set forth these tasks for the Shandong Provincial Islamic Association: implementing the policy on religious freedom, organizing Islamic personnel to study, uniting Muslims to contribute to the Four Modernizations, establishing friendship with foreign Muslims, supporting the just struggles of Islamic countries, opposing hegemonism and protecting world peace. [SK251009 Jinan Shandong Provincial Service in Mandarin 2300 GMT 24 Oct 80 SK]

SHANGHAI FAMILY PLANNING--The Shanghai television station recently held a discussion meeting of advanced units and individuals in family planning, preschool education and women's and children's work. Yang Kai, vice mayor of Shanghai, spoke at the meeting on family planning work and encouraged each couple to have only one child. The Shanghai television station announced that it would show a video tape recording of the meeting on Channel 5 on the evening of 23 October. [Shanghai City Service in Mandarin 0000 GMT 23 Oct 80 OW]

CSO: 4005 END

END OF FICHE

DATE FILMED

24 Nov. 1980

D.D.